DECLASSIFIED

UNITED STATES PACIFIC FLEET
AIR FORCE,
CARRIER AIR GROUP FOURTEEN

FF12/CVG14/A9
HPA:emj
Ser: 06

MAR 15 1953

[redacted]

From: Commander Carrier Air Group FOURTEEN
To: Commanding Officer, USS KEARSARGE (CVA-33)

Subj: Action Report of Carrier Air Group FOURTEEN for period 8 January 1953 through 28 February 1953; submission of

Ref: (a) OPNAV INSTRUCTION 3840.4

1. This report is forwarded as enclosure (1) for inclusion in the Action Report of the USS KEARSARGE (CVA-33) as required by reference (a).

2. Information, comments and recommendations are presented under the headings indicated below:

I MISSION AND COMPOSITION
II CHRONOLOGY
III ORDNANCE
IV DAMAGE
  Inflicted on the enemy
  Damage to our aircraft
V PERSONNEL PERFORMANCE AND CASUALTIES
VI COMMENTS
  Operations and procedures
  Summary of combat sorties by type and mission
  Summary of average combat flight hours, average number of sorties by squadron
  Maintenance and Material
  Air Intelligence
  Survival
  Electronics

H. P. ADY, Jr.

[redacted]

ENCLOSURE (1)

[redacted]

DECLASSIFIED

FINAL ACTION REPORT
CARRIER AIR GROUP FOURTEEN
FOR PERIOD
8 January 1953 - 28 February 1953

PART I

MISSION AND COMPOSITION

During the period 8 January 1953 to 28 February 1953, the primary mission of Air Group ONE HUNDRED ONE, redesignated Carrier Air Group FOURTEEN on 4 February 1953, was to fly close air support of ground troops, destruction of enemy military supplies in the North Eastern half of Korea, interdiction of enemy main supply routes, destruction of enemy vehicles and enemy troops, air support of NGF, and support of East Coast Blockade and Escort Force. Photographic and weather flights were employed in support of these missions as required.

Composition of Forces:

8 January 1953 through 1 February 1953

UNIT	TYPE AIRCRAFT	OPERATING A/C 1-8	OPERATING A/C 2-1	PILOTS 1-8	PILOTS 2-1
VF-11 CDR D. P. PHILLIPS	F2H-2	15	13	25	24
VF-721 LCDR F. R. ROBERTS	F9F-2	13	14	*22	22
VF-884 LCDR R. E. MC ELWEE	F4U-4	12	12	20	20
VA-702 LCDR H. C. MC CLAUGHERTY	AD-4, AD-4L	15	15	**27	27
VC-3 (Det. FOX) LCDR R. F. KANZE	F4U-5N	3	4	5	5
VC-35 (Det. FOX) LCDR M. G. BRAMBILLA	AD-4N	3	2	5	4
VC-61 (Det. FOX) LCDR H. M. GARVEY	F2H-2P	3	2	5	5
VC-11 (Det. FOX) LT T. H. RIGGAN	AD-4W	3	3	5	5

* Includes Operations Officer, CVG-101
** Includes Commander Carrier Air Group 101 and Administrative Officer, CVG-101

[redacted]

ENCLOSURE (1)

-21

DECLASSIFIED

[redacted]

1 February 1953 through 28 February 1953

UNIT	TYPE AIRCRAFT	OPERATING A/C 2-1	OPERATING A/C 2-22	PILOTS 2-1	PILOTS 2-22
VF-11 LCDR L. E. FLINT	F2H-2	13	13	24	24
VF-141 (Redesignated 2-4-53) LCDR F. R. ROBERTS	F9F-2	14	13	*22	22
VF-144 (Redesignated 2-4-53) LCDR R. E. MC ELWEE	F4U-4	12	11	20	20
VA-145 (Redesignated 2-4-53) LCDR H. C. MC CLAUGHERTY	AD-4, AD-4L	15	14	**27	26
VC-3 (Det. FOX) LCDR R. F. KANZE	F4U-5	3	4	5	5
VC-35 (Det. FOX) LCDR M. G. BRAMBILLA	AD-4N	3	4	4	4
VC-61 (Det. FOX) LCDR H. M. GARVEY	F2H-2P	3	4	5	5
VC-11 (Det. FOX) LT T. H. RIGGAN	AD-4W	3	3	5	5

* Includes Operations Officer, CVG-14
** Includes Commander Carrier Air Group 14 and Administrative Officer, CVG-14

PART II

CHRONOLOGY

1-8-53 to 1-16-53: Hong Kong, B.C.C. for liberty, recreation and upkeep.

1-16-53: Enroute to operating area. Sixteen refresher sorties were flown this date.

1-17-53: Enroute to operating area. Sixteen (16) refresher sorties were flown this date.

1-18-53: Enroute to operating area.

1-19-53: Enroute to operating area. Thirty two (32) refresher sorties were flown this date.

1-20-53: No air operations - replenishment.

[redacted]

[redacted]

DECLASSIFIED

1-21-53: 87 sorties. Morning hecklers covered coastal routes north of WONSAN, and found little or no activity. AD's and F4U's hit a supply area located in WONSAN and another, 10 miles NE of KUMSONG. Close air support was furnished to the front line troops in the eastern sector. Jet aircraft acted as flak suppression and also hit troop shelters at MAJON-NI and south of WONSAN. One jet strike hit a mining area located 15 miles northeast of YANG-DOK. Excellent results were obtained.

1-22-53: 81 sorties. Morning hecklers covered rail lines and MSR's east and north of WONSAN. One locomotive was damaged. Jet aircraft acted as flak suppression for prop strikes, also, covered MSR's east and south of WONSAN. AD's and F4U's flew close air support missions. in direct support of the front line troops in the western and eastern sectors. Another strike group hit a supply and build-up area in the vicinity of the front lines of the eastern sector. One jet strike hit a supply area in the vicinity of KUMDONG-NI with excellent results.

1-23-53: 101 sorties. Naval Gun Fire Spot was furnished to the ships at WONSAN. Close air support was flown by AD's and F4U's in direct support of front line troops in the central and eastern sectors. Morning hecklers covered MSR's north and West of WONSAN destroying 1 locomotive and numerous trucks. Other prop strikes hit supply areas in the vicinity of KOCK-A-RI, OBOK-TONG, NOWAM-NI and PAKTAL. Jet aircraft covered recco routes in all sectors. One jet strike hit a supply area in the vicinity of KANBALGO-RI. One pilot, Commander D. P. PHILLIPS, CO, VF-11, was lost this date when his plane crashed 5 miles west of WONSAN. He was apparently hit by AA fire while in his dive.

1-24-53: No air operations - replenishment.

1-25-53: 95 sorties. AD's and F4U's hit enemy supply build-up areas in the vicinity of CHAECH-ON-AI, WONSAN and OBOK-TONG. Close air support was furnished to the front line troops in the central and eastern sectors. Jet aircraft acted as flak suppression for the prop strike groups. Jet aircraft also covered MSR's north of WONSAN and attacked supply areas in the vicinity of SONGINYONG-NI and HAKSONGCHON. Night heckler planes covered lines of communications along the coastal areas north of WONSAN destroying two trucks.

1-26-53: 101 sorties. Jet aircraft covered MSR's north and west of WONSAN. Strikes were made on supply areas in the vicinity of HWAGYE-RI, SAGIRI and SOSANG-NI. Propeller driven aircraft furnished close air support in direct support of the front line troops in the central and western sectors. Strikes were made against supply build-up areas in the vicinity of PUKCHONG with excellent results. Night hecklers covered MSR's along the coast north of WONSAN.

1-27-53: 98 sorties. Propeller driven aircraft flew close air support for the front line troops in the western and central sectors. Supply areas in the PYONG-NI area was hit with excellent results. Naval gunfire spot was furnished to the bombardment forces at CHONGJIN. Jet aircraft covered MSR's north and west of WONSAN. Barracks areas at HUNGNAM and ANHUNG-NI were hit. Supply areas were bombed in the vicinity of MASING-NYONG and the PUJONGANG RESERVOIR. Night hecklers covered MSR's north and west of WONSAN. Numerous trucks were destroyed and damaged.

[redacted]

DECLASSIFIED

[redacted]

1-28-53: 61 sorties. Inclement weather hampered air operations. One propeller driven aircraft strike hit supply areas in the vicinity of PYONGBUGUN with excellent coverage. Jet aircraft furnished flak suppression and acted as TARCAP. Other jet aircraft covered MSR's north and west of WONSAN. Night hecklers covered coastal routes north and south of WONSAN. Numerous trucks were destroyed and damaged. LT F. C. ANDERSON and Aircrewman SCHMID, J.R., AT3, VC-35 Detachment FOX, did not return from a night heckler mission - SAR was conducted with negative results.

1-29-53: No air operations. Inclement weather hampered replenishment.

1-30-53: 42 sorties. Completed replenishment. AD's and F4U's hit supply areas in WONSAN. Jet aircraft acted as flak suppression and TARCAP. Other jet aircraft covered MSR's north and west of WONSAN.

1-31-52: 91 sorties. Morning hecklers covered coastal routes between WONSAN and SONGJIN. Naval Gun fire spot was furnished to the bombardment group in the WONSAN area. AD's and F4U's hit supply and billeting areas in WONSAN. Jet aircraft covered MSR's in the northern sections north of WONSAN. Strikes were made on supply areas at TONG-HUNG, SAM-HO and HAOSANG. One large jet strike hit billeting area in WONSAN.

2-1-53: 90 sorties. Morning hecklers covered MSR's north and west of WONSAN. AD's and F4U's furnished close air support for front line troops in the western and eastern sectors. Supply areas were attacked at PYONG-NI. Naval Gun fire spot was furnished to bombardment group at HUNGHAN. Jet aircraft covered MSR's in all sectors hitting supply and billeting areas at TAEMOK, CHUKKUN-NI, YONGUNG-NI and TOKSO-DONG.

2-2-53: 94 sorties. Morning hecklers covered rail lines north of WONSAN. One locomotive was damaged. AD's and F4U's flew close air support for the front line troops in the central and western sectors. Strikes were made on supply areas at PANGOKCH-ON and PUNGSAN. Jet aircraft acted as TARCAP. Jets covered MSR's in all sectors north and south of WONSAN. Strikes were made against supply areas at SINPO, TONGYANG and SONGDONG. Troop and billeting areas were hit in the vicinity of TANCHON and SONY-ON.

2-3-53: No air operations - replenishment.

2-4-53: 91 sorties. Weather hampered operations throughout the day. Morning prop and jet strikes hit supply areas in the HAMHUNG area. Close air support was furnished in direct support of the front line troops in the central sectors. Jet aircraft hit supply areas at KILCHU and HUNGNAM. One prop strike bombed supply and billeting areas in the vicinity of POKCHONG.

2-5-53: 2 sorties. Inclement weather halted air operations.

2-6-53: 35 sorties. Only one launch was made late in the period due to weather. Props and jets hit targets in the HAMHUNG-HUNGNAM areas.

2-7-53: 3 sorties. Replenishment.

[redacted]

[redacted] DECLASSIFIED

2-8-53: 92 sorties. Morning hecklers covered MSR's north and west of WONSAN. Numerous trucks were destroyed or damaged. AD's and F4U's flew close air support for front line troops in the eastern sector. A troop shelter was bombed at SOKSADONG-NI and a supply area was hit in the vicinity of KUHAKSAN. One pilot, LTJG D. H. HAGGE, VA-145, was lost on this strike due to enemy AA fire. Jet aircraft acted as flak suppression for propeller driven aircraft and covered MSR's in all sectors. One jet strike bombed supply buildings in the HUNGNAM area.

2-9-53: 92 sorties. Morning hecklers covered coastal routes north of WONSAN. A few trucks were destroyed. Jet aircraft covered MSR's in the northern sectors and hit supply and troop shelters at PUKCHONG and SAMBONG. AD's and F4U's flew close air support for front line troops in the eastern sector. One strike was made against supply buildings at HUNGNAM and WAPORI.

2-10-53: 105 sorties. Morning hecklers covered MSR's along the coast north of WONSAN. Numerous trucks were destroyed or damaged. Propeller driven aircraft hit supply areas north of CHONGJIN. Jet aircraft struck supply areas in the vicinity of HOERHONG, KOMUSAN and PURONGDONG.

2-11-53: No air operations - replenishment.

2-12-53: 95 sorties. All strikes this date were directed against supply and billeting areas in the vicinity of WONSAN.

2-13-53: No air operations due to weather.

2-14-53: 113 sorties. Jet aircraft covered recco routes in all sectors. One jet strike acted as flak suppression for AD's and F4U's. Jet strikes hit supply areas south of MAJON-NI and in the WONSAN area. Propeller driven aircraft flew close air support for front line troops in the eastern sector. Strikes against supply areas were made in the vicinity of CHANGJON and YONGDANG-NI. Night hecklers covered coastal routes north of WONSAN.

2-15-53: No air operations - replenishment.

2-16-53: 106 sorties. Morning hecklers covered MSR's along the coast north of WONSAN. Numerous trucks were destroyed and damaged. Jet aircraft acted as flak suppression for prop strikes. Other jets covered MSR's in the central and northern sectors. One strike hit a supply area west of MAJON-NI. Propeller aircraft flew close air support for the front lines in the eastern sector. Supply areas were bombed northwest of MUCHON and in the vicinity of TAEJONG-NI.

2-17-53: 109 sorties. Morning hecklers covered MSR's south of WONSAN and coastal routes north of HAMHUNG. Many trucks were destroyed. Jet aircraft covered recco routes in all sectors. Strikes were made against supply areas east of YANGDOK and in the HUNGHAM area. AD's and F4U's bombed supply areas north of KILCHU and in the WONSAN area.

2-18-53: 109 sorties. Morning hecklers covered rail lines along the coast, north of WONSAN. One locomotive and numerous rail cars were destroyed. Jets and propeller driven aircraft concentrated their efforts on rail interdiction and the bombing of key rail bridges between WONSAN and PUCHONG.

[redacted]

DECLASSIFIED

2-19-53: No air operations - replenishment.

2-20-53: 110 sorties. Morning hecklers covered rail lines along the coast north of WONSAN. One locomotive and many box cars were destroyed in the vicinity of TANCHON. Naval Gunfire spot was furnished to the bombardment group at WONSAN. AD's and F4U's flew close air support for front line troops in the central sector. Other strikes hit supply areas in the vicinity of CHANG-JIN and south of ANDORI. Jet aircraft covered MSR's west and north of WONSAN. One strike was made against troops, supply, and build-up areas in the vicinity of KOSONG with excellent results.

2-21-53: 47 sorties. Morning hecklers covered rail lines, along coast north and south of WONSAN. Jet aircraft and propeller driven aircraft hit rail lines north of SONGJIN. Limited operations due to weather.

2-22-53: No air operations - enroute Yokosuka, Japan.

PART III

ORDNANCE

PERFORMANCE

Enclosure (3) contains a summary of Ordnance performance during the entire combat tour.

ORDNANCE EXPENDITURES

1. 16 through 31 January 1953

TYPE ORDNANCE	AD-4	AD-4N	F4U-5N	F4U-4	F2H-2	F9F-2	TOTAL
100 lb. GP	214	91	0	0	378	226	909
250 lb. GP	540	8	0	371	296	387	1,602
500 lb. GP	157	23	26	117	0	0	323
1000 lb. GP	229	0	0	0	0	0	229
2000 lb. GP	8	0	0	0	0	0	8
260 lb. Frag	142	42	156	82	59	292	773
5" Mk 25	0	0	0	0	9	0	9
Napalm Tanks	8	0	0	0	0	0	8
Napalm Mix		0	0	0	0	0	
6.5" ATAR	0	0	0	0	53	0	53
3.25" ASAR	12	8	0	0	0	0	20
Flares	-	153	58	0	0	0	211
20MM	29,000	5,200	10,900	-	34,308	30,777	110,185
.50 Cal.	-	-	-	94,800	-	-	94,800
Total pounds	524,120	34,120	53,560	172,570	158,020	195,270	1,137,660
Total tons	262.06	17.06	26.78	86.28	79.01	97.64	568.83

2. 1 through 21 February 1953

TYPE ORDNANCE	AD-4	AD-4N	F4U-5N	F4U-4	F2H-2	F9F-2	TOTAL
100 lb. GP	250	100	0	31	502	449	1,332
250 lb. GP	752	75	168	632	596	625	2,848
500 lb. GP	225	25	35	171	58	0	514
1000 lb. GP	414	0	0	8	0	0	422
2000 lb. GP	8	0	0	0	0	0	8
260 lb. Frag	230	0	34	52	226	300	842
5" Mk 25 ATAR	0	0	4	8	181	7	200
3.25" ASAR	12	43	0	0	0	0	55
20MM	41,577	7,000	12,000	-	63,741	35,486	159,804
.50 Cal.	-	-	-	104,200	-	-	104,200
Flares Mk 6	-	162	70	-	-	-	232
Total pounds	816,200	44,475	68,900	269,240	312,400	300,130	1,811,345
Total Tons	408.1	22.24	34.45	134.62	156.2	134.62	905.67

HUNG ORDNANCE REPORT

1. 16 through 31 January 1953

BOMBS

Type Ordnance	Aero 14A	Mk 55 Mod 1
100 lb. GP	3	0
250 lb. GP	1	0
260 lb. Frag	2	0
Total	6	0

Disposition of hung ordnance:

Number remaining on racks upon landing	6
Number coming off during take-off*	2
*250 lb. GP Mk 55 Mod 1 rack	
Number dropping off upon landing	0

ROCKETS

Type	Aero 14A
5" Mk 25 ATAR	1
6.5" ATAR	2
Total	3

Disposition of hung rockets:

Number remaining on racks upon landing	3
Number dropping off upon landing	0

[redacted]

DECLASSIFIED

2. 1 through 21 February 1953

BOMBS

Type Ordnance	Aero 14A	Mk 55 Mod 1	Mk 9	Total
100 lb. GP	1	1	-	2
250 lb. GP	0	3	-	3
260 lb. Frag	2	0	-	2
Total	3	4	-	7

Disposition of hung ordnance:

Number remaining on racks upon landing	7
Number dropping off upon landing	0

ROCKETS

Type	Aero 14A	Mk 9	Total
5" Mk 25 ATAR	14	5	19

Disposition of hung rockets:

Number remaining on racks upon landing	19
Number dropping off upon landing	0

Two 250 pound bombs came off during catapult shot due to failure of Mk 55 Mod 1 rack to lock properly.

PART IV

DAMAGE

1. Damage inflicted on enemy 16 January 1953 to 21 February 1953:

TARGET	DESTROYED	DAMAGED
BOATS	17	20
BUNKERS	43	79
BARRACKS & BUILDINGS	499	462
GUN EMPLACEMENTS	0	12
HIGHWAY BRIDGES	1	4
LOCOMOTIVES	2	10
OXCARTS	183	61
RR BRIDGES	3	13
RR CARS	22	22
SUPPLY DUMPS	1	2
TRUCKS	75	29
TROOPS KIA	235	WIA 47
WAREHOUSES	42	23
DOCKS	1	0

[redacted]

[redacted]

DECLASSIFIED

TARGET	DESTROYED	DAMAGED
SUPPLY & PERSONNEL SHELTERS	172	129
WAGONS	1	3
ARTY POSITS	2	8
COASTAL GUNS	2	1
MORTARS	16	13
SIGNAL TOWERS	0	1
VEHICLE SHELTERS	6	38
BARNS	2	0
CATTLE KILLED	50	WIA 0
OXEN KILLED	24	WIA 0
BRICK KILN	0	1
AA POSITS	2	3
JEEPS	0	1
HANDCARS	2	0
SAWMILL	0	1
CRANES	0	1
POWER INSTALLATIONS	0	1
RR TUNNELS	0	1
CAVES	0	7

2. Damage to own aircraft:

(a) Aircraft losses

DATE	SQUADRON	MODEL	BUNR	CAUSE
23 Jan	VF-11	F2H-2	125668	AA
28 Jan	VC-35	AD-4N	124748	Unknown - missing
8 Feb	VA-145	AD-4	123871	Unknown - probable AA

(b) Aircraft damaged by enemy action:

DATE	SQUADRON	MODEL	BUNR	CAUSE	DAMAGE
23 Jan	VF-721	F9F-2	127134	AA	Port tip tank
23 Jan	VF-721	F9F-2	123574	AA	Port Stub wing
23 Jan	VF-11	F2H-2	125664	AA	Nose section
26 Jan	VF-884	F4U-4	97046	AA	Port stabilizer
27 Jan	VF-721	F9F-2	123580	AA	Port wing
27 Jan	VA-702	AD-4	123833	AA	Starboard stabilizer
27 Jan	VF-884	F4U-4	97293	AA	Oil cooler
28 Jan	VC-11	AD-4W	125709	AA	Starboard wing
28 Jan	VF-721	F9F-2	123078	AA	Stbd wing, tail, fuselage
31 Jan	VF-884	F4U-4	97046	AA	Starboard stabilizer
1 Feb	VF-11	F2H-2	125663	AA	Nose, stbd engine, vertical fin
2 Feb	VA-702	AD-4	123831	AA	Cowling, Port aileron
8 Feb	VF-144	F4U-4	81317	AA	Port oil cooler
10 Feb	VF-144	F4U-4	82177	AA	Stbd stub wing
12 Feb	VF-141	F9F-2	123573	AA	Nose section
14 Feb	VA-145	AD-4	128922	AA	Rudder
14 Feb	VA-145	AD-4	123831	AA	Port wing, fuselage

[redacted]

DECLASSIFIED

DATE	SQUADRON	TYPE	BUNR	CAUSE	DAMAGE
14 Feb	VA-145	AD-4	123845	AA	Port stabilizer
16 Feb	VF-144	F4U-4	81573	AA	Starboard wing
18 Feb	VA-145	AD-4	123959	AA	Port wing, engine cowl
18 Feb	VA-145	AD-4	123924	AA	Tail section
20 Feb	VC-3	F4U-5N	122205	AA	Port flap; fuselage

(c) Operational Damage

DATE	SQUADRON	TYPE	BUNR	CAUSE	DAMAGE
16 Jan	VF-11	F2H-2	125663	Canopy jettisoned during catapulting	Port stabilizer, vertical fin
17 Jan	VC-61	F2H-2P	128867	Port landing gear collapsed during landing	Port inboard flap, wheel well door and tip tank
22 Jan	VF-11	F2H-2	125022	Barrier	Nose wheel door
22 Jan	VF-884	F4U-4	81573	Bomb fragments	Rudder, engine cowl
22 Jan	VF-721	F9F-2	122565	Gunfire	Fuselage, engine
23 Jan	VF-11	F2H-2	125501	Barrier	Nose gear and doors, tail hook, tip tank
23 Jan	VF-11	F2H-2	125022	Barrier	Overhaul
25 Jan	VF-721	F9F-2	125664	Gunfire	Engine
27 Jan	VF-11	F2H-2	125674	Barrier	Tail hook, stbd flap, landing gear doors
27 Jan	VC-61	F2H-2P	128861	Gunfire	Port landing gear
27 Jan	VA-702	AD-4	123924	Unknown	Lost engine cowl in flight
31 Jan	VF-11	F2H-2	125068	Bomb fragments	Stbd elevator
1 Feb	VF-11	F2H-2	125675	Landing	Nose wheel
2 Feb	VA-702	AD-4	123960	Explosion in port wing gun	Port wing
8 Feb	VF-144	F4U-4	97046	Barrier	Port wing, prop, engine, fairing
12 Feb	VA-145	AD-4	128990	Bomb fragments	Stbd stabilizer
14 Feb	VF-141	F9F-2	125501	Bomb fragments	Port wing
18 Feb	VF-11	F2H-2	125649	Barrier	Landing gear doors
18 Feb	VF-141	F9F-2	123694	Bomb fragments	Wings, fuselage, empennage
18 Feb	VF-141	F9F-2	127129	Gun explosion	Stbd gun access dor, guns

(d) Other damages:

DATE	SQUADRON	TYPE	BUNR	CAUSE	DAMAGE
9 Jan	VC-3	F4U-5N	122185	Hit by 5" gun barrel	Fuselage
22 Jan	VC-61	F2H-2P	128865	Port wing overfolded	Port wing and wing stub
22 Jan	VF-884	F4U-4	82046	Taxied into	Rudder, port elevator and stabilizer
22 Jan	VF-884	F4U-4	81502	Taxied into	Stbd elevator
27 Jan	VA-702	AD-4	123833	Handling	Stbd elevator
28 Jan	VC-3	F4U-5N	122205	Bomb truck	Stbd elevator
29 Jan	VF-721	F9F-2	127190	Handling	Tail skid

[redacted]

30

[redacted] DECLASSIFIED

DATE	SQUADRON	MODEL	BUNR	CAUSE	DAMAGE
31 Jan	VF-884	F4U-4	81868	Handling	Port elevator
31 Jan	VF-884	F4U-4	80848	Taxied into	Port elevator
1 Feb	VF-721	F9F-2	123078	Handling	Stbd stabilizer
1 Feb	VF-884	F4U-4	80848	Tie down line broke during turn-up	Stbd elevator
1 Feb	VC-35	AD-4NL	124143	Collision with tractor	Radar dome
2 Feb	VA-702	AD-4	128990	Handling	Port elevator
5 Feb	VF-11	F2H-2	125652	Handling	Port wheel well door
5 Feb	VC-35	AD-4N	125714	Handling	Stbd elevator tip
8 Feb	VF-141	F9F-2	127129	Handling	Port elevator tip
8 Feb	VF-141	F9F-2	122565	Handling	Port stabilizer
9 Feb	VF-144	F4U-4	81871	Slipstream over-folded stbd wing	stbd wing
9 Feb	VF-141	F9F-2	123576	Handling	Stbd elevator tip
13 Feb	VF-141	F9F-2	122573	Handling	Stbd elevator
20 Feb	VF-141	F9F-2	122573	Taxied into	Port elevator

PART V

PERSONNEL PERFORMANCE AND CASUALTIES

PERFORMANCE

1. Moderate to severe weather operations were encountered during this period. All hands displayed exceptional performance considering the continuous work-load imposed in the latter phases of this tour on the line. Lengthy periods (30 to 40 days) on the line affects morale greatly which seems to drop off sharply after a four week period especially during the winter season.

CASUALTIES

1-23-53: Commander D. P. PHILLIPS, USN, Commanding Officer of VF-11 was shot down by AA during a recco mission along the MSR north of WONSAN and is missing in action.

1-28-53: Lieutenant F. C. ANDERSON, USNR, of VC-35 Detachment FOX flying an AD-4N was lost on a night heckler mission. His last position was reported over the beach on a heading for the Task Force. Lieutenant ANDERSON is missing in action.

1-28-53: SCHMID, J. R., AT3, USN, was the aircrewman on Lieutenant ANDERSON's flight and is missing in action.

2-8-53: Lieutenant (junior grade) D. H. HAGGE, USN of Attack Squadron 145 was shot down this date on a "Cherokee" mission and is missing in action.

PART VI

COMMENTS

OPERATIONS

A thorough summary of operational comments are contained in enclosure (3) of this action report, covering the entire combat tour of Air Group FOURTEEN.

31

[redacted]

DECLASSIFIED

SUMMARY OF COMBAT SORTIES BY TYPE AND MISSION

1. 16 thorugh 31 January 1953

	F2H	F9F	F4U	AD	F4U-5N	ADN	ADW	F2H-2P
STRIKE	45	70	73	88				
RECCO	54	62						
RR HECKLER					11	10		
ASP (DAY)							16	
ASP (NIGHT)							5	
HECKLER (NIGHT)					13	10		
NGF Spot			6		6			
Photo								24
Photo Escort	21							3
CAP	47	52						
ECM						8		
CAS			43	43				
SPECIAL		1	1	1		3	1	
TARCAP	8	4						
Other	3	1	4	16	1	11		1
	178	190	127	148	31	42	22	28

Grand Total: 766

In addition to the above, 64 refresher sorties were flown enroute to operating area.

Aborted sorties are listed below for this period:

F2H	9
F4U	1
F9F	1
ADN	2
F2H-2P	2
AD	1
TOTAL	16

Total sorties for period - 846.

2. 1 through 21 February 1953:

	F2H	F9F	F4U	AD	F4U-5N	ADN	ADW	F2H-2P
Strike	149	157	135	163				
Recco	83	76						
RR Heckler					31	19		
ASP (DAY)						3	28	
ASP (NIGHT)						1	2	
HGF Spot					3			
Heckler (Night)					6	3		
Photo					1			53
Photo Escort	33							

[redacted]

32

DECLASSIFIED

	F2H	F9F	F4U	AD	F4U-5N	ADN	ADW	F2H-2P
Photo Escort	33							
CAP	95	77						
CAS			42	51				
Special					3	2	1	
TRACAP	4	8						
OTHER			12	21	1	28		1
TOTALS	364	318	189	236	45	58	31	54

GRAND TOTAL: 1295

Aborted sorties are listed below for this period:

F2H-2	10
F9F-2	5
F4U-4	3
AD-4	0
F4U-5N	1
ADN	4
ADW	1
F2H-2P	1
TOTAL	25

Grand Total for period: 1320

SUMMARY OF AVERAGE COMBAT FLIGHT HOURS, AVERAGE NUMBER OF SORTIES BY SQUADRON:

PER PILOT DATA

1. 16 through 31 January 1953:

	F2H	F9F	F4U	AD	F4U-5N	ADN	ADW	F2H-2P
Sorties	7.6	10.0	7.2	7.6	6.8	14.0	6.2	11.0
Hours	12.1	14.0	19.2	20.1	21.2	37.8	16.3	10.6
CV landings	7.4	10.0	7.2	7.2	6.8	14.0	6.2	8.2

GROUP AVERAGE

Sorties	8.5
Hours	18.9
CV Landings	8.4

2. 1 through 21 February 1953:

	F2H	F9F	F4U	AD	F4U-5N	ADN	ADW	F2H-2P
Sorties	15.6	15.1	9.5	8.4	9.2	13.3	6.6	11.0
Hours	25.2	22.3	26.7	23.7	27.7	32.7	15.7	17.4
CV Landings	15.3	15.0	9.7	8.4	9.1	12.4	6.6	10.8

GROUP AVERAGE

Sorties	11.1
Hours	24.0
CV Landings	11.0

DECLASSIFIED

[redacted]

MAINTENANCE AND MATERIAL

1. On several occasions, F2H nose wheels failed to center after catapult take-off and became jammed in the nose wheel well upon retraction. It was then usually necessary to use the emergency system while applying 4-6 G's to the aircraft in order to extend the gear. Cleaning the nose wheel fittings, daily application of low viscosity grease and servicing of the shimmy dampers reduced the frequency of this trouble but did not entirely eliminate it.

2. F2H main landing gear door activators continued to malfunction, predominatly in cold weather. The lack of sufficient spares required the overhaul and repair of faulty actuators on board.

3. Skyraider ACOG's were averted following a series of tail wheel shock strut failures by the prompt initiation of an overhaul procedure to prevent recurrent strut collapse. Disassembly of the struts revealed the presence of minute brass shavings which had undoubtedly caused scarring of the seals, allowing air pressure to escape. Upon cleaning, installation of new seals, reassembly and test, there has been no recurrence of the trouble.

4. One AD-4 returned from flight with buckled skin in the vicinity of the upper engine mount stiffeners at station 336. Investigation revealed that the left upper engine mount stiffener was broken at station 336. The stiffener was repaired, the defective skin renewed, and the aircraft returned to service.

5. On one occasion, when a catapult hold back ring failed to break, an F2H catapult hold back assembly and adjacent skin and stringers were torn from the airplane. The damaged area was completely rebuilt and the airplane returned to service.

6. AD aircraft experienced four instances of 20mm links from the outboard gun being jammed between the aileron throw differential crank, P/N 4262941-2, and the throw tube assembly, P/N 4262943-500, as a result of separation of the link ejection-chute assembly, P/N LLK 20G19, causing restriction of aileron travel to about ¼ normal throw. Details of a recommended fix involving installation of a small detachable canvas cover to shield the throw tube assembly and aileron throw differential crank have been submitted by VA-145 NULM 5-53.

7. The F9F-2 arresting hook gear lift control circuit was modified by supplying ground through the nutcracker switch rather than the engine control circuit to prevent the arresting hook from dropping as the aircraft taxied over the barriers. This modification was accomplished by shifting wire G309A20 from terminal A1 to terminal X1 of the nutcracker relay.

8. A total of 16 F2H fuel controls (5803 series) have been replaced to date. In general, fuel control operational characteristics were highly satisfactory anywhere from sea level to 49,000 feet (indicated). Except for a few minor adjustments, several fuel controls have operated satisfactorily for better than 400 hours and some have exceeded this figure.

[redacted]

34

9. Aircraft availability for this period was as follows:

VC-35 Det FOX	AD-4N	99%
VC-11 Det FOX	AD-4W	96%
VF-141	F9F-2	96%
VF-11	F2H-2	95%
VC-3 Det FOX	F4U-5N	95%
VC-61 Det FOX	F2H-2P	92%
VA-145	AD-4	91%
VF-144	F4U-4	90%

AIR INTELLIGENCE AND SURVIVAL

A concise summary of Air Intelligence and Survival data is contained in Enclosure (3) of this Action Report covering the entire period of combat air operations of Carrier Air Group FOURTEEN during this tour in the forward area.

AVIATION ELECTRONICS

1. GENERAL

During the fourth and last tour on the line in Korean waters, the aviation electronics personnel of CVG-14 encountered no major and only a few minor discrepancies. VHF failures continued in what has come to be an acceptable normal, due to the old problem of faulty 6AK5 type of electron tubes. A small measure of success was obtained after carrying out a"Burning in" process on the 6AK5 tubes. The process consisted of operating the tube at rated voltage for a period of time after they had passed a rigorous tube checker test. Tubes were picked out of the "Burning In" unit for use as replacements in the ARC-1, instead of going directly from stock to the tube tester to the ARC-1.

2. RMCM GEAR

In order to aid persons who eventually repair RMCM Gear returned to class 265, VF-144 has recently adopted the policy of placing a copy of the RUDAEE in a small envelope and attaching it tothe gear. Pertinent information is entered under "Remarks" on the RUDAEE form. In many cases, space on the screening tag does not permit entering of adequate information as to the cause of the failure, or a description of the discrepancy when its cause is unknown.

3. RADIATION INDICATOR FOR AN/APN-1

A radiation indicator was constructed for use in line checking the AN/APN-1 radio altimeter. This simple device consists of a crystal detector in series with a milliampere meter movement, connected across a standard AT-4/APN-1 dipole. It permits checking both AT-4 APN-1 antennas and their coax cables, by first checking one system, then reversing the antenna coax connectors on the RT-7/APN-1, which connects the transmitter to the other antenna. It has also been found that many AT-4/APN-1 antennas, which have been bent by plane handlers, need not be replaced, provided that a proper amount of radiation is indicated after the antenna has been straightened. These straightened antennas have proven to give satisfactory service.

DECLASSIFIED

[redacted]

4. ELECTRONICS CHECK SHEET FOR F4U-4 AIRCRAFT

A detailed aircraft electronics check sheet was drawn up and employed as a supplement to the standard COMAIRPAC electronics check sheet for F4U-4 aircraft. This check sheet has proven very beneficial, and has insured thorough and complete aircraft electronics checks. It requires, in addition to other necessary items, a complete aircraft operational check, using standard test equipment on all "Intermediate" checks, and specifies a complete bench check of all electronics equipment on all "Major" checks, along with the proper operational check with the gear re-installed in the aircraft. This procedure accomplished preventative maintenance, and at the same time, provided additional practice in alignment and testing of the equipment by squadron technicians. The aircraft electronics check sheet referred to above is attached as ANNEX A.

5. AN/CRC-17 and AN/PRC-17 SURVIVAL RADIOS.

During the last two tours on the line, the ship has not had an in port period in Yokosuka. Therefore, the AN/CRC-7 and the AN/PRC-17 Survival radio checking service provided by COMFAIRJAPAN has not been available. In order to hold frequent periodic checks on this equipment; test loads for the batteries have been improvised by VF-144 electronics personnel and made available to other squadrons in the air group. Survival radios have been checked at biweekly intervals.

6. AN/APG-30 MAINTENANCE AND TRAINING PROGRAM

A report on VF-11 squadron's AN/APG-30 maintenance and training program, including photographs of bench installations, line and bench performance sheets, flight test check-off lits, etc., has been prepared and forwarded to COMAIRPAC for inspection and evaluation by VF-11 letter serial 23-53 of 2 February 1953.

[redacted]

UNITED STATES PACIFIC FIELD
AIR FORCE
FIGHTER SQUADRON EIGHT HUNDRED EIGHTY FOUR

DECLASSIFIED

ELECTRONICS CHECK SHEET (F4U-4)

MODEX	BU. NO.	DATE IN:	DATE OUT:			INITIAL
INTERMEDIATE CHECKS			1	2	3	
1. Clean all external antennas. Check flat top antenna for proper tension. Replace broken or bent antennas as necessary.						x
2. Check all control boxes for loose knobs, missing mounting screws.						x
3. Raise seat backrest; check all cabling for tight clamps, binding and chafing.						x
4. Check all mounting racks for broken shock mounts and missing locking nuts.						x
5. Check proper safetying of all gear in mounting bases. Check APX-6 inverter for security.						x
6. Check all cannon plugs and coax connectors for tightness. (Do not use pliers).						x
7. AN/ARC-1 VHF a. Remove antenna coax, connect wattmeter ME-11/V and TS-80. Check tuning and antenna load on all channels. Check for proper crystals.						x
b. Replace antenna and check radiation with TS-509/VR wavemeter, or I-106A.						x
c. Voice check with another aircraft.						x
8. AN/APX-6 IFF						
a. Connect VPM-8 Test set to external 110V. 60,400 or 800 cycle power source.						x
b. Using the antenna "hat" check for "accept" or "reject" on all modes of operation.						x
c. Check impact switch for tumble.						x
d. Check destruct switch cover for safety wiring with breakable wire.						x
9. AN/APN-1 RADIO ALTIMETER						
a. Check for a slight indication on the indicator needle.						x
b. Place absorbtion meter near transmitter antenna and check for indication of radiation.						x

ANNEX A

DECLASSIFIED

ELECTRONICS CHECK SHEET (F4U-4)
(CONTINUED)

FIRST SECOND AND THIRD INTERMEDIATE CHECKS	INITIAL
9. c. Reverse antenna connections on main unit and repeat the above check.	x
10. AN/ARR-2 HOMING RECEIVER	
a. Visually check that VHF tuning knob is on "46".	x
b. Check operation on each channel	x
c. In the absence of an outside signal, check all channels with TS-24.	x
d. Check action of volume and pitch controls	x
11. AN/ARC-5 RANGE RECEIVER	
a. Check that antenna is connected to proper terminal.	x
b. Check action of volume control; check mechanical linkage for binding.	x
c. Check calibration of control box dial with tuning dial on the receiver.	x
d. In the absence of a broadcast signal, check operation on 414 KC.	x
12. HEADSET - MICROPHONE CORD.	
a. Check cord CX-922 for deterioration of rubber covering, and exposed wires.	x
b. Check bakezite connector plug for cracks.	x
13. Secure seat back rest, sign off master check sheet.	x
14. Make entry in radio log, list all parts used or material expended on this check.	x

I certify that this check has been completed under my supervision and all discrepancies have been corrected. This aircraft ready for flight.

_____
Crew-Leader

UNITED STATES PACIFIC FLEET
AIR FORCE
FIGHTER SQUADRON EIGHT HUNDRED EIGHT FOUR

DECLASSIFIED

ELECTRONICS CHECK SHEET

MODEX	BU.NR.	DATE IN:	MAJOR CHECK 1 2 3 DATE OUT:	INITIAL
1. Raise seat back rest and remove following equipment from aircraft for bench check: RT-18/ARC-1, RT-82/APX-6, RT-7/APN-1, R4/ARR-2A, R-23/ARC-5.				
2. On all second major checks, remove and service AN/APX-6 inverter.				
3. AN/ARC-1 VHF				
a. Completely align receiver and transmitter and perform preventive maintenance as per shop procedure sheet.				
b. Enter reading on channel 5 as indicated below: TS-80/U OSC Ig _____ MIX Ig _____ DRIV Ig _____ PA Ig _____ MOD Ir _____ ME-11/U-WATTS CH 5 _____ SENS. MICROBOLTS CH 5 _____				
c. ARC-1 SERIAL NO. _____				
4. AN/APX-6 IFF				
a. Remove destructors andplace in Ready Service Magazine.				
b. Completely align receiver and transmitter and make all adjustments as indicated in shop procedure sheet.				
c. ENTER READINGS AS INDICATED BELOW: RECEIVER Freq. _____ MC Sens (LO) _____ db Sens (NORM) _____ db TRANSMITTER Frequency _____ MC Power _____ WATTS				
d. APX-6 SERIAL NO. _____				
5. AN/APN-1 RADIO ALTIMETER				
a. Completely align and tune actimeter and perform preventive maintenance as indicated on shop procedure sheet.				
b. Enter readings as indicated below: TRANSMITTER Power Out _____ VOLTS RECEIVER LD Range Sens _____ db HI Range Sens _____ db				
c. APN-1 SERIAL NO. _____				
6. AN/ARR-24 HOMING RECEIVER				
a. Completely align receiver and perform preventive maintenance as indicated on shop procedure sheet.				
B. ENTER READINGS AS INDICATED BELOW: Audio Output Volts CH #3 _____ Receiver Sens. db				
c. ARR-2 SERIAL NO. _____ ANNEX A				

DECLASSIFIED

ELECTRONICS CHECK SHEET
ALL MAJOR CHECKS
(Continued)

7. AN/ARC-5 RANGE RECEIVER	
a. Align receiver and perform preventive maintenance as indicated on shop procedure sheet.	
b. Receiver sensitivity normal	
c. ARC-5 SERIAL NO. _____	
8. Clean all external antennas; replace broken or bent antennas as necessary.	
9. Before installing gear, thoroughly check all racks, cabling, relays, etc., for security and chafing.	
10. Check control boxes for security and loose knobs.	
11. Reinstall and safety all gear.	
12. A. APX-6	
a. Check bonding of AS-133 antenna	
b. Check destruct circuit with test light or voltmeks before connecting to main unit.	
c. Ground check all modes with UPM-8	
d. Reinstall distractors.	
B. ARC-1 a. Check autotune cycling and radiation with TS-509/UR.	
b. Voice check with another aircraft	
C. APN-1	
a. Check for slight indication on altimeter.	
b. Check radiation of transmitter with wavemeter.	
c. Reverse antenna connections at main unit and repeat above check.	
D. ARR-2A	
a. Check action of pitch and volume controls.	
b. In the absence of ZB signal, use TS-24 and check all channels.	
E. ARC-5	
a. Check action of volume control.	
b. Check mechanical linkage for binding.	
c. Check calibration of control box dial with receiver tuning dial.	
d. In the absense of a bradcast signal check operation on 414 KC. (JET HOMING)	
13. MIKE-HEADPHONE CORD	
a. Check CX-922 for deterioration of rubber covering and for exposed wires.	
b. Check bakelite plug for cracks.	
14. SECURE SEAT BACK-REST, SIGN OFF MASTER CHECK SHEET.	
15. Make entry in radio log and list all parts used and material expended on this check.	

I certify that this check has been completed under my supervision and all discrepancies corrected. This aircraft is ready for flight.

_____
Crew Leader

DECLASSIFIED

SCHEMATIC FOR AN/CRC-7 AND AN/PRC-17 SURVIVAL RADIO BATTERY TEST

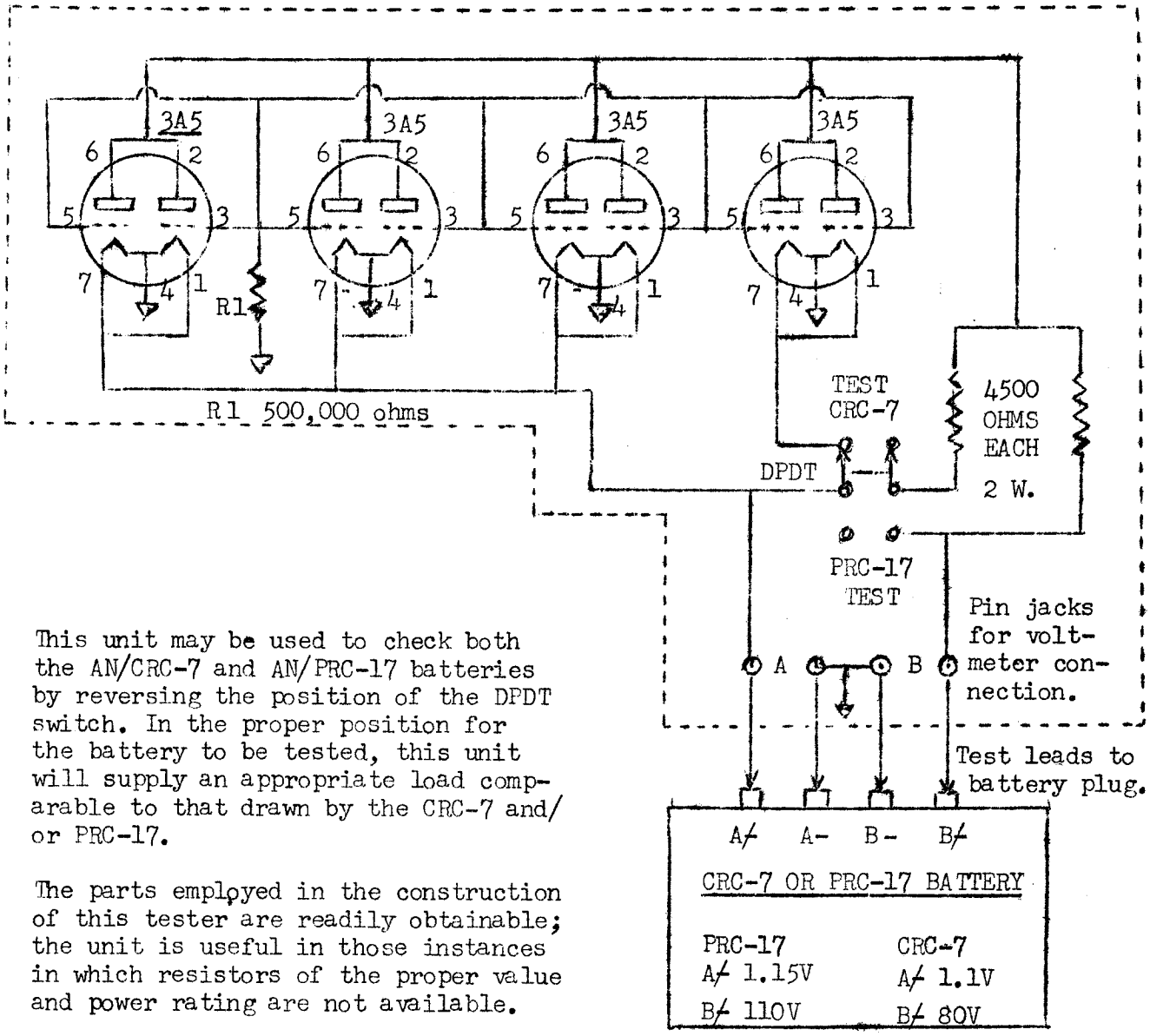

This unit may be used to check both the AN/CRC-7 and AN/PRC-17 batteries by reversing the position of the DPDT switch. In the proper position for the battery to be tested, this unit will supply an appropriate load comparable to that drawn by the CRC-7 and/or PRC-17.

The parts employed in the construction of this tester are readily obtainable; the unit is useful in those instances in which resistors of the proper value and power rating are not available.

DECLASSIFIED

U.S.S. KEARSARGE (CVA-33)
Fleet Post Office
San Francisco, California

[redacted]

SUMMARY REPORT OF OPERATIONS DURING DEPLOYMENT IN WESTPAC

This summary is submitted to furnish interested commands with consolidated information of "lessons learned" by this ship regarding carrier operations in WestPac in support of the United Nations effort against North Korea during the period indicated.

INDEX

Part I: Engineering Department Summary

Part II: Air Department Summary

Part III: Gunnery Department Summary

Part IV: Supply Department Summary

Part V: Operations Department Summary

PART I

ENGINEERING DEPARTMENT

1. ENGINEERING GENERAL

a. Summarized data covers the deployment period from 28 August 1952 to 28 February 1953. A review of the employment of the ship serves to emphasize the major maintenance problem confronting the engineering department. In the main propulsion and electronic sections where availability of equipment during operations must necessarily be close to 100%, the problem of time for maintenance becomes most important. It is recommended that consideration be given in preparation of operating schedules, to the length of time the ship has been operating in the area. Periods at anchor, and in port for upkeep only, should suffice during the first third of a ships deployment, but after that time regular scheduled maintenance periods at a repair facility becomes mandatory. This is particularly true during the last third of a deployment period if the ship is to be maintained ready for unrestricted operations.

b. Summarized Data.

(1) Days not underway, restricted availability at SRF Yokosuka	23
Days not underway, upkeep at anchor Hong Kong	8
Days not underway, on steaming notice (P.H. and Yokosuka)	10
Total days not underway	41

[redacted]

Enclosure (2)

42

(2) Total days underway	161
(3) Engine miles steamed	61,749
(4) Fuel oil used (gallons)	9,433,687
(5) Fuel oil transferred to DD's (gallons)	1,586,625
(6) Fresh water (feed and potable) used (gallons)	17,439,820
(7) Fresh water received (gallons)	2,354,096

PART II

AIR DEPARTMENT

1. Air Department General

It is recommended that prior to embarking the air group, that all the plane captains attend a course in fire fighting. Also the entire V-1 and V-3 divisions should be refreshed in flight deck and hangar deck fire fighting, prior to deployment.

2. Aircraft Handling. The Air Group flew a total of 7,185 combat sorties, this does not include various other flights. It may be assumed that in actually handling that number of aircraft each plane was handled at least 2½ times before launching again. This in turn would amount to about 17,835 planes handled. Only 104 planes were damaged, one was a major strike. It is felt that this number could have been cut down if there had not been so many respots at night. This situation could be relieved if it were possible to receive the following day's air plan earlier, preferably before 1600.

No major difficulty was encountered in aircraft handling. However, it is considered a must that both after and forward towbars be available so that jet aircraft can be towed either backwards or forward. Under high wind conditions or a pitching and rolling deck, the respot is slowed up considerably due to the danger of the tipping over of F9F type aircraft. Advance notice of course changes by the bridge greatly helped to reduce this danger.

3. Arresting Gear. Number of arrested landings - 7187. Conventional barrier engagements - 5. Jet barrier engagements - 7. Complete barricade engagements - 3. Pendants used; short (89'-6") - 53; long (102') - 10. Yielding elements replaced - 47.

During cold weather operations, it was found that barrier stanchion action became slow due to moisture condensing and freezing in the fourway valves. This condition was corrected by wrapping asbestos cloth around the valves exposed to the weather. A blow torch was made available to heat the incoming air line in the event further difficulty was encountered.

4. Catapult. During the cruise in the forward area a total of 4482 shots were fired from both catapults, as follows:

	Port Catapult	Starboard Catapult
No loads	29	9
Conventional A/C	357	296
Jet A/C	1853	1938
Total	2239	2243

The cruise consisted of four (4) periods on the line involving both warm and cold weather operations. The latter presented problems for flight deck crews in acquiring an adequate number and a practical type of glove, particularly for the holdback and release men. The crew as a whole maintained their morale and were particularly interested in their work regardless of its nature. No injuries or casualties were sustained, primarily due to the safety conscious program conducted within the division.

The excellent leadership of the petty officers was one of the primary factors responsible for the very successful operation of the catapults.

5. Maintenance.

The V-4 division's allowance of seventy-one (71) enlisted men was considered adequate for the assigned mission. There was an excess of AD, AE, and AM ratings assigned to the ship. These personnel were assigned to other Air Department divisions until vacancies occurred in the V-4 Division. This condition will be eliminated with the new Bureau of Naval Personnel allowance and the assignment of additional responsibilities to the V-4 Division.

The equipment that did not contribute materially to the operations was the cold weather gear: Herman Nelson Heaters, snow plows, snow brushes, kill frost liquid, etc. These items occupied considerable valuable storage space but no change is suggested as it is considered to be necessary due to the uncertainty of the weather.

6. Gasoline and Lube Oil Expenditure.

Date	Gasoline (gallons)	Lube Oil (gallons)
10 Sep 1952-22 Feb 1953	4,185,892	14,847

7. A total of 380,710.18 standard cubic feet of oxygen was manufactured during the period of 10 September 1952 to 22 February 1953.

a. During this period, except for four (4) failures of one freon compressor, the overall operation of the oxygen nitrogen plants has been very satisfactory. As a general practice, one plant was operated for thirty (30) days while the other one was closed down for maintanance and upkeep.

DECLASSIFIED

b. Due to all oxygen outlets on the flight deck being on the port side, servicing planes spotted on the starboard side presents a difficult problem. A two hundred foot length of hose is required to service these planes. Handling this much hose during respot, when planes, tractors and bomb skids are moving about is difficult and dangerous.

PART III

GUNNERY DEPARTMENT

1. Refueling at Sea.

a. The ship was refueled 27 times and a total of 8,569,306 gallons of fuel oil and 4,035,205 gallons of gasoline was received.

2. Re-arming at Sea.

a. The ship was rearmed 25 times and a total of 5,594 tons of ammunition were received in these operations. The largest amount of ammunition received at any one replenishment was 365 tons received November 24, 1952 from the USS PARACUTIN (AE-18). The best hourly average was obtained on 10 October 1952 from the USS CHARA (AKA-58) at which time an average of 125.9 tons was reached. The overall hourly average from all re-armings was 90.5 tons. There was a large quantity of freight, mail, bomb shipping bands, and crates handled that was not computed in weights handled during these replenishments.

b. Ammunition taken on Board.

Following paragraph is a recap of all ammunition taken on board:

TYPE	NUMBER TAKEN ON BOARD	TYPE	NUMBER TAKEN ON BOARD
J12	5,000	K12	80
J17	116	K14	2
K1	108	K14B	54
K1C	235	K14C	261
K2	2,183	K19	9,850
K3	2,556	K20	11,100
K4	11,636	K21	6,325
K5	6,632	K23	55
K8	2	K26	1,890
K9	6,045	K27	603
K29	279	L3B	90
K29A	3,666	L4A	385
K29B	3,666	L5B	1,368
K35	16,705	L6A	325
K36	2,284	L6B	2,448
K37	2,176	L8B	2,888
K40A	25	L9	2,938
K41A	75	M1	263,600
K41C	25	M2	264,570

DECLASSIFIED

[redacted]

TYPE	NUMBER TAKEN ON BOARD	TYPE	NUMBER TAKEN ON BOARD
K41D	50	M3	210,748
K41E	120	M4	707,000
K43G	49	M10	504,560
K48	25	N1	1,020
K49D	15,590	N2	32
K49E	100	N4	64
K51	23,800	N6	144
K52	26,525	P3	1,070
L1A	291	P9	44
L2A	108	P10	100
L2B	75	P13	266
L3A	24	P39	1,248

c. Problems. The winches on this ship, which are expected to be replaced in the near future, are slow and were out of operation a large part of the time during the early part of our deployment in WestPac. This deficiency made it necessary to use house falls and high lines with consequent loss of tonnage and time.

3. Provisioning and procurement of aviation stores at sea.

a. The ship was provisioned 16 times at sea and a total of 850 tons of food and 102 tons of aviation stores were received. The best hourly average was obtained on 20 January 1953 from the USS GRAFFIAS (AF-29), an average of 91.5 tons per hour. A large quantity of other minor items were transferred but not computed in these replenishments. It is pointed out that the low overall average in tonnage is in part due to the light aviation stores which are in most part bulky.

4. Refueling Destroyers at Sea.

a. The ship refueled 36 destroyers at sea. There were 10 of these destroyers fueled at night. Miscellaneous freight, mail and passengers were transferred during these operations.

5. Miscellaneous transfers at Sea.

a. The ship received 90 destroyers alongside the port or starboard quarter for miscellaneous transfers. 56 transfers of personnel, 31 transfers of freight and 23 transfers of Guard Mail were made. The largest transfer was one set of rotor blades for the helicopter, received from DD 723 on September 17, 1952. On 30 September 1952 the ship received the DD 545 and DD 744 at dusk, at the same time on each quarter, for transfer of U.S. Mail, Stores and Personnel.

PART IV

SUPPLY DEPARTMENT

1. Aviation Stores.

DECLASSIFIED

a. The total money value of aviation material issued to embarked squadrons was $ 1,094,263.68.

b. During the period of deployment in the forward area 10,816 items were requested of which 10,490 were furnished from stock. Availability from stock was 97 per cent.

c. There were 96 individual ACOG item requests, 33 were requested for NIS allowance items, 63 were requests for non-allowance items.

d. Major Components Issued

(1) Aircraft Engines

J42-P8	4
R2800-18W	9
R2800-32W	2
R3350-26WA	8
J34-WE-34	24
Total	47

(2) Wing Panels

AD4	AD4L	AD4N	AD4W	F4U4	F4U5N	F9F2	F2H2	F2H2P	
1	0	0	0	7	1	0	3	0	12 Total

2. Mobile Support.

a. The KEARSARGE was replenished on the line four times by the U.S.S. CHOURRE (ARV-1). A total of 102 tons were received; 20 tons on 14 October, 59 tons on 19 December, 10 tons on 7 February, and 13 tons on 15 February.

b. Since the CHOURRE was seldom in the operating area, emergency requests were primarily filled by COD shipments or by fleet freight from Sasebo. The COD system was of great value and it is recommended that it be utilized to the fullest extent possible.

c. The supply system has operated primarily on priority indicators to the exclusion of DDDs. The KEARSARGE received near the end of its deployment shipments of priority B initial outfitting requirements with original DDD prior to deployment. The number of DDDs that are passed to higher supply echelons compel this vessal to assign a very large number of priority A indicators to it's requisitions.

3. Commissary.

a. The total tonnage of food received by this vessel during the period in the Forward Area from 8 September 1952 to 28 February 1953 amounted to 1293 tons, which included in port and at sea delivery, at a cost of $646,706.61.

b. The cost of provisions consumed in the general mess during the above period total approximately $571,408.14 resulting in an average daily cost of subsistence per man of $1.22.

4. Ship's Store.

a.

SHIP'S STORE	AVERAGE PER MONTH
Cash From Sales	$31,780.70
Sales at Cost Price	26,176.19
Inv. at Cost Price	44,770.10
Net. Profit	3,530.09
Profit Per Centage	13.25
Average Sale Per Man	9.62

5. Clothing and Small Stores.

a.

CLOTHING AND SMALL STORES	AVERAGE PER MONTH
Cash From Sales.	$9,646.20
Inventory	37,635.85
Average Sale Per Man	2.95

6. General Stores

TOTAL VALUE OF ISSUES.....$122,219.16

TOTAL VALUE OF INVENTORY.....$187,386.12

NUMBER OF ITEMS RECEIVED:

GENERAL STORES.....3000
SHIPS SPARES.....1200
ELECTRONIC PARTS..... 900

PART V

OPERATIONS DEPARTMENT

1. Air Intelligence.

a. Pre-deployment Planning and Organizational Structure.

(1) Organization: The most important task of pre-deployment planning is setting up an organization which employs the talents of available personnel and physical facilities to the best advantage. In the organization used by

this ship, the air group's and the ship's air intelligence officers functioned as a team, with the ship's air intelligence officer in charge. The result was a highly efficient organization whereby each officer was afforded the opportunity to become familiar with all phases of air intelligence on the ship level. A minimum of administrative problems were thus encountered. Each officer was soon capable of taking over any job within the organization in case of an emergency.

(2) Intelligence materials:

(a) Basic check-off list A and B of ComAirPac Instruction 3840.1A, covering maps, gazeteers, and pilot handbooks, must be used prior to depatture CONUS. Additional charts and replacements of obsolete charts are supplied by ANO Atsugi, Japan. Proper storage facilities and ready issue bins for charts were obtained and stocked prior to deployment.

(b) In order that squadron AIO's could have ready access thereto, all pertinent dispatches were placed on a board in appropriately marked spots (See Action Report 20 October 1952 to 6 December 1952).

(c) One to fifty thousand (1:50,000) charts for flak plotting and briefing were prepared and kept up to date.

(d) Briefing and general information charts were prepared on sliding panels.

(f) A procedure for receiving, logging, indexing and disseminating all information contained in air intelligence publications and doctrines was initiated and maintained.

(g) During the planning of these and other facilities, information obtained by the advance party was of great benefit.

b. Notes concerning operations on the line.

(1) Considerable confusion was eliminated by making the air intelligence office off limits to all except necessary personnel during the preparation of information for the next day's operation. Being able to work without interruption enabled office personnel to prepare all necessary briefing information within 3 to 4 hours after receipt of the Task Force Air Plan. Squadron AIO's and flight leaders were thus able to make target and terrain studies the night before scheduled operations.

(2) Bombline violations and bombing of other than assigned targets were guarded against by intensive briefing of flight leaders on terrain and other target identification features.

(3) Squadron AIO's were required to standby during the writing of strike-flash reports to answer questions concerning the debriefing information. Delay and confusion was thus avoided.

(4) A form was devised to facilitate a running compilation of debriefing information required for the air summary.

(5) The commanding officer and all department heads were briefed nightly on the next day's operations and on current intelligence information.

(6) Bombline and friendly shipping dispatches were often late in arriving. A high degree of co-ordination between communications and intelligence personnel is mandatory to obtain this information prior to briefing.

(7) Many problems were solved through close liaision between the flag and the ship's intelligence section. The attendence of the ship's AIO at daily flag air operations briefings was of incalculable value.

(8) Upon returning to the line from an in-port period there was usually some delay in receipt of current flak and intelligence information needed for briefing. It is suggested that such information might be delivered by the escort vessel meeting the arriving carrier.

2. Communications.

a. During the time when ComCarDiv 5 was aboard the Kearsarge as CTF 77, dispatch traffic through Main Comm averaged between 250 and 300 messages a day, of which approximately half were encrypted. It was necessary to maintain a 24 hour watch of 1 CWO and 2 crypto officers, plus 2 other officers at peak load periods. During the fourth tour on the line the flag was detached and the volume of traffic diminished to approximately 100 messages a day. This could be handled by 1 CWO and 1 crypto officer with 1 other officer on call for peak loads.

b. The ship has been operating with less than 50% of allowance of rated communications personnel. A three section watch was able to handle this load by the use of inexperienced seamen trained for particular specialties such as write-up man, call sign breakdown man, and messenger. This system left very little time for training for advancement in rate but was necessary to meet operational requirements.

c. Radio teletype has proved of great value in handling the large volume of traffic, both within the task force on UHF and ship-shore with NDT. Failures were experienced at times on both systems but most of these troubles were quickly corrected. The greatest difficulty to overcome was the poor night-time reception on the CTF 77-NDT duplex RATT circuit. The use of RATT not only speeded up the flow of traffic but also reserved the employment of the critically few qualified CW operators to vital CW circuits.

d. The designation of this ship as a minor CRF has resulted in certain advantages to the ship and the task force. With three crypto machines running almost constantly, the extra CRF machines have provided a ready replacement for breakdowns. Good CRF machines have also been transferred to destroyers at sea in exchange for their faulty ones. But no actual crypto repair has been possible for most of the time because the ship has never had a qualified crypto repair man. ComCarDiv 5 staff had a qualified CrO on board for about three weeks but his services were lost with the transfer of the flag. It is recommended that qualified CRF repair men be assigned to deployed carriers designated as minor CRFs.

e. Considerable delay in receiving general messages has frequently occurred while in the Far East. Changes to cryptosystems, publications and circuits have often been received after the change was in effect. This was due primarily to deferred messages being held up by high precedence traffic on the overloaded Guam fleet primary general broadcast. It is recommended that either longer advance notice be given these changes or higher precedence be assigned those Alcoms and Alcompacs which are designed to give advance warning of changes. Faster and more direct distribution of changes to Air Force Communications Operating Instructions, would also help to prevent discrepancies and compromises in joint communications.

f. The post office space was found to be inadequate to handle the volume of letters and parcel post sent from and received by the ship. On replenishment days, parcel post was sorted and distributed on the hangar deck. This method was quick and efficient.

3. Combat Information Center. CIC functioned as Flag CIC from 14 September 1952 until 12 February 1953 and then without the Flag until 23 February. The following factors are enumerated as an overall summary for the period:

a. The minimum strength for efficient operation was ten officers and 75 men in the OI Division, which permitted 65 enlisted watch standers when allowance is made for housekeeping functions. The officers were assigned as follows: Three watch officers; three air controllers; and three surface control officers. The most effective watch arrangement for enlisted men consisted of two sections of 25 men each during air operations and one section of 15 men for the period 2100 to 0300, when no air operations were in progress. (See Kearsarge Action Report 14 September-20 October 1952). Supporting functions for the Flag required the full time employment of ten men.

b. Radar availability was excellent, there being no operating day when any radar was completely out of commission. This was believed due to a determined preventative maintenance program and the constant efforts of the ER Division.

c. Radar performance was generally excellent within the inherent limitations of each type of radar. The SPS radar was generally reliable up to about 75 miles, although it would not hold jet targets on every sweep beyond about 40 miles. Reliable tracking of jets could be made at 120 miles in isolated cases, but there were many times when jets were not picked up at any range. Positive control of jets could be maintained only with the use of IFF, which was always effective to 150 miles. The SPS had abnormally large side lobes when operating near land masses, sometimes rendering a large portion of the scope unusuable. The SX range was usually less than that of the SPS, and the SX was usually kept in standby to reduce maintenance and insure availability in case the SPS failed. The SRA was unreliable and was seldom used. The SG-6B performance was excellent, consistently tracking surface targets at 20-25 miles, and was limited only by excessive sea return during heavy weather and antenna laboring in winds above 40 knots. The SX height finder was limited in reliable range to 30 miles with isolated pickups at 50 miles, and was accurate to within plus or minus 1000 feet.

d. VHF communications were unsatisfactory due to a lack of sufficient frequencies, a shortage of transmitters, range limitation, and excessive feed-over between circuits. Range could be obtained up to 100 miles, but reliable range for CAP control was about 40 miles. VHF range limitation, coupled with similar limitation of the height finder, required that interceptions by CAP be made fairly close to the force.

e. Communications discipline by most air groups was good to poor. Circuits were often very heavily loaded. The GUARD channel was particularly overloaded and many times misused during emergencies. All ships suffered badly from the lack of an Air Control net in the force. The Combat Information net was occasionally excessively crowded with non-combat information. This was undoubtedly necessitated by the insufficiency of VHF frequencies.

f. Several junior officers from destroyers were trained in day air control, but the nature of task force operations prevented a concentration in all-weather control training. It was observed that non-aviator controllers performed very well under normal situations, but due to lack of fundamental aviation knowledge they were often unable to handle unusual situations or emergencies. For this reason it was necessary for carriers to monitor air control circuits when destroyers and cruisers had air control and to take control when necessary. The primary value of air control by destroyers was in Anti-Submarine Patrol.

g. Recommendations. It is recommended that investigation and research be emphasized for the improvement of equipment so as to permit Combat Air Patrol intercepts at a minimum range of 80 miles against high speed jet aircraft. Specifically this requires:

(1) An air search radar which can reliably track jet aircraft at a range of 120 miles without the use of IFF.

(2) A reliable height finding system to a range of 100 miles.

(3) Reliable communications to 100 miles.

The only other defense against such air attacks at the present time appears to be radar and communications facilities in depth.

4. Photographic Laboratory.

a. The below figures are the usage data on the negatives and prints made and chemicals used by the ship's Photographic Laboratory from September 1952 through February 1953.

FILM SIZE	AMOUNTS USED
9 X 9	29,696
9 X 18	21,782
8 X 10	2,719
16 MM, 50' Magazine	1,911

DECLASSIFIED

PAPER SIZE	AMOUNTS USED
9 X 9	62,242
9 X 18	125,899
8 X 10	16,111

CHEMICALS	AMOUNTS USED
D-72 (1 Gal. size)	768
D-19 (1 Gal. size)	621
Fixer (1 Gal. size)	2,029
DK-50 ($4\frac{1}{2}$ Gal. size)	51
Hypo (100 lb. size)	14
Ammonium Chloride (5 lb. size)	34
Kits, Reversal, Sulfide	45
Kits, Reversal, Black and White	4

b. The Photographic Laboratory developed a total of 69,400 feet of 16MM film. None of the figures include photo work accomplished for the Public Information Office, RUDM's and other miscellaneous types of photography as these totals are comparatively insignificant.

T. B. CLARK