[redacted]

UNITED STATES PACIFIC FLEET
AIR FORCE
CARRIER AIR GROUP FIVE

DECLASSIFIED

CVG5/A16-13/(cfc)
Serial 072-51

31 October 1951

From: Commander Carrier Air Group FIVE
To: Commanding Officer, U.S.S. ESSEX (CV-9)

Subj: Action Report of Carrier Air Group FIVE (1 October 1951 - 31 October 1951)

Ref: (a) OpNav Instruction 3480.1

1. This report is submitted in compliance with reference (a) for inclusion in the Action Report of U.S.S. ESSEX (CV-9).

PART I: COMPOSITION OF OWN FORCES AND MISSION

a. The composition of the group follows:

UNIT	TYPE A/C	OPERATIONAL A/C 10/1	OPERATIONAL A/C 10/31	PILOTS 10/1	PILOTS 10/31
CVG-5 CDR M. U. BEEBE	None	None	None	1*	1
VF-51 LCDR E. M. BEAUCHAMP	F9F-2	16	15	21	21
VF-172 CDR M. E. BARNETT	F2H-2	13	11	24	23
VF-53 CDR H. J. TRUM, III	F4U-4B	16	15	23	21
VF-54 CDR P. N. GRAY	AD-2 AD-4 AD-4L	1 8 6	3 8 6	28**	27
VC-3 (Det.) LT J. S. LAKE	F4U-5NL	3	3	5	5
VC-11 (Det.) LT M. R. MILLER	AD-4W	2	2	5	5
VC-35 (Det.) LCDR F. F. BERTAGNA	AD-3N AD-4Q AD-4NL	1 1	3	5	5
VC-61 (Det.) LT S. L. JAYNES	F9F-2P	3	3	4	4
	TOTAL	70***	69	116	112

* The Air Group Commander flies regularly with VF-51 and VF-54.
** Includes Air Group Operations Officer.
*** CVG-5 entered combat area with 70 aircraft. 2 F2Hs and 1 AD4W were left ashore for replacement.

19

[redacted]

DECLASSIFIED

[redacted]

31 October 1951

b. MISSION

The primary mission of Air Group FIVE during the reporting period remained the support of United Nations ground forces in Korea. This support was conducted in the form of interdiction of the enemy's lines of communication. The Close Air Support missions had been cancelled when the Air Group was in the port of Yokosuka, Japan. The problems of interdiction remained much the same, there being only two changes of note. The appearance of a greater amount of rail traffic developed rail-cutting as a routine operation, and an increase in Naval Gunfire Support spotters gave an opportunity to participate in this important work. Night Heckler Missions still proved that, by far, the greatest percentage of enemy transportation is moving during the hours of darkness. Photographic missions were flown daily and netted excellent results in the identification of camouflaged targets and damage assessment in addition to special missions. AEW and ASP missions provided constant protection against the possibility of enemy air or submarine action, although no contacts were made.

An active combat evaluation of the F2H aircraft is being pursued and two reports of the evaluation progress were submitted to CNO in accordance with instructions.

[redacted]

20

DECLASSIFIED

[redacted]

PART II: CHRONOLOGY

The respite offered by the retirement of the ESSEX to the port of Yokosuka, Japan gave all hands an opportunity to reacquaint themselves with life ashore. During the ten day period, maximum use was made of rest camp facilities in the area. A total of three hundred enlisted men and fifty five officers were given an opportunity to use the rest camps. During the entire in-port period, maintenance and replenishing operations were conducted. Damaged aircraft were off-loaded and replacements taken aboard, or repaired to service status. Staff and Squadron Officers attended briefings and conferences at NavFE, FEAF, and Army GHQ where minor problems of communications, intelligence, logistics, and operations were discussed. (At the end of the ten days the Air Group was fitted with 73 aircraft of which 2 F2Hs and 1 AD4W were left ashore to be used for replacements as necessary). All hands were facing the coming operation with confidence and quite ready to resume life at sea.

Refresher operations were conducted on the way to the operating area, but inclement weather prevented combat operations on the first day the ESSEX rejoined Task Force SEVENTY SEVEN. The weather lifted during the night however, and offensive sorties were scheduled on the morning of 4 October.

On 4 October, Air Group FIVE launched its first effort for the reporting period. Forty-six (46) sorties were flown over Korea with the Banshees of VF-172 taking rail and supply targets under fire.

On 5 October, seventy-five (75) sorties were launched, the majority of which were interdiction flights. Additional emphasis had been placed on the effectiveness of rail cuts in place of bridge destruction in the case of easily by-passed crossing. Flights were ordered to crater tracks at regular intervals, thereby forcing the enemy to disperse his repair operations over a greater area. Corsair pilots led by Commander Herman J. TRUM, III, Commanding Officer of VF-53, flew a rescue Combat Air Patrol over a downed pilot from the BON HOMME RICHARD. In spite of very heavy and accurate fire from positions on the ground, the Corsairs succeeded in neutralizing the immediate area and a helicopter rescue was effected.

On 6 October, eighty-eight (88) sorties were flown. While attacking a bridge on the road west of KOWON, LTJG C. I. TEAGUE, USN, of VF-54 was hit by flak. His plane exploded in the air and then crsahed into the ground. There was no chance of survival and LTJG TEAGUE was listed as killed in action. LTJG Max MORRIS had the privilege of making the ESSEX's two thousandth catapult shot

[redacted]

21

DECLASSIFIED

[redacted]

31 October 1951

without an accident. Banshee and Panther fighters bombed and strafed two troop concentrations killing an estimated seventy troops.

On 7 October, eighty-seven (87) sorties were flown with the bombers and fighters assigned rail cutting missions and targets of opportunity. Four series of cuts were laid with a total of thirty-eight (38) cuts in all. Corsairs flew another rescue CAP mission over a downed South African Air Force pilot. Unfortunately, the pilot was not recovered.

On 8 October, the force retired to replenish.

On 9 October, eighty-one (81) sorties were flown. Banshee jets led by LCDR James B. CAIN, Executive Officer of VF-172, found one train with three live locomotives just after sunrise. The train was stopped by strafing and 100# bombs. Prop sorties later in the day and for two days following pummelled the train using it as a dump target when assigned targets were obscured by weather. The entire train was useless at the end of the attacks. During the day twenty-eight (28) rail cuts were sewed in two stretches of track each about three miles long.

On 10 October, eighty-four (84) sorties were flown. For the first time Night Hecklers were armed with napalm and found it to be an excellent weapon for night harrassing of the enemy truck convoys. Weather curtailed operations for a few hours in the late morning but all hops were flown on a later schedule. Having been hit by enemy ground fire, LT Sam CHESSMAN of VF-53 was forced to fly his Corsair to K-18 and land. The landing was made without incident, but CHESSMAN broke his leg when he slipped off the oil covered wing of his plane and was hospitalized.

On 11 October, eighty-four (84) sorties were flown again. Night Hecklers armed with napalm and bombs razed highways west of YANGDOK. Day flights were assigned supply points found in photographs from the day previous. Excellent results were observed.

On 12 October, the force retired to replenish. Sixty-one (61) bags of mail were waiting on the decks of the service force vessels, the biggest load of news from home to date.

On 13 October, nineteen (19) sorties were flown in spite of adverse weather conditions. Best targets of the afternoon were direct hits into the mouths of tunnels. On two instances the tunnels were closed off with land slides, and, in a third, a secondary explosion after the impact indicated that a locomotive hiding within had been hit. To further insure the stoppage of

[redacted]

32

hiding locomotives, rail cuts were made outside both ends of three tunnels with a total of seventeen (17) craters.

On 14 October, four (4) sorties were flown. Operations were then cancelled because of the fringe weather of Typhoon Ruth.

On 15 October, forty-five (45) sorties were flown with weather over the target area making offensive missions difficult. An excellent recovery of the last hop was made by LSOs who brought all the aircraft to safety in spite of equally winds and a violently pitching deck.

On 16 October, the weather lifted and eighty-six (86) sorties were flown. Assigned bridge targets, ADs and F4Us dropped spans on three (3) bridges and damaged six (6) others. Jet coverall flights and reconnaissance flights attacked rail targets and rolling stock with a total of two (2) locomotives damaged and sixteen (16) boxcars and gondolas destroyed. While searching the road near MAJON-NI, LCDR Irad Blair OXLEY, Operations Officer of VF-172, was hit with ground fire. Absence of radio transmission indicated that the pilot was hit. His aircraft dived and crashed into the ground. There was no possibility of escape and OXLEY was reported as killed in action. During the evening hops, Night Hecklers armed with napalm found four convoys on the highways west of YANGDOK. They napalmed, then strafed in the light of the fires. Following up with bombing runs, they accounted for an estimated twenty-five (25) trucks destroyed and many more damaged.

On 17 October, the force retired to replenish.

On 18 October, fifty-one (51) sorties were flown. Inclement weather began closing in in the afternnon. Bomber strikes and fighter sweeps hit targets of opportunity along rail rights of way and highways.

On 19 October, twenty-nine (29) sorties were flown, and a full replenishment operation was conducted in addition. Three trains were found by Night Heckler flights and effectively stopped before daylight. Day flights finished up the job leaving the trains severly damaged and the locomotives destroyed.

On 20 October, bad weather set in again but failed to cancel flight operations, and twenty-four (24) sorties were flown. Broken low cloud layers over the target areas made offensive missions largely ineffective.

On 21 October, marginal weather threatened most of the day but seventy-six (76) sorties were flown. Skyraider flights had good success against rail and bridge targets.

DECLASSIFIED

LCDR Russell LECKLIDER, Executive Officer of VF-54, and a top bomber in the group scored direct hits on six bridges and with his flight succeeded in knocking spans from four (4) of them.

On 22 October, clear weather permitted seventy-seven (77) sorties to be flown. Jet coveralls and sweeps found two (2) trains and several supply points which they bombed and strafed, effectively stopping the locomotives for subsequent destruction by the props. One train, on an upgrade detached the last car, which rolled runaway down the hill. Both it and the main portion of the train were attacked and destroyed. Naval gunfire missions flown by LT N. E. CURRY and LTJG James R. FOSTER of VF-53 received a well done from ComCruDiv THREE for an outstanding job of gunfire spotting and neutralization of shore batteries which had taken the surface ships under fire.

On 23 October the force retired to replenish.

On 24 October, ninety-four (94) sorties were flown. Principal targets were bridges and sections of rail lines that had been spotted in use by the Night Hecklers. For the first time the Night Hecklers had found convoys of ammunition trucks on the highways and explosions followed good hits on at least ten (10) separate trucks. The AD and F4U flights sowed a total of twenty-five (25) rail breaks. In the afternoon an Air Force B-29 was followed and crippled by enemy aircraft. As the B-29 approached the east coast near WONSAN she called to the Navy for assistance. A rescue CAP was flown over the downed airmen after they had abandoned the aircraft. Naval small craft and destroyers recovered eight (8) of the eleven (11) men who had bailed out.

On 25 October, ninety-three (93) missions were flown. Photographs from the previous day indicated camouflaged targets along the highway west of YANGDOK. Excellent results were forthcoming when the camouflaged targets proved to be supply points, a dozen of which were left burning by the attacking aircraft. LTJG Robert DOSS, USN, of VF-172 experienced a cold shot from the catapult and his Banshee hit the water just ahead of the port bow. The aircraft was struck by the ship. DOSS was recovered quickly by the helicopter and suffered mild shock and bruises.

On 26 October, ninety-six (96) missions were flown, representing the biggest effort made by the Air Group for this period. Primary targets were rail breaks and bridges. Following two (2) runs from which LTJG William BURGESS of VF-54 scored direct hits dropping the span of a bridge, he returned to make a photo run and his aircraft was struck by groundfire. BURGESS headed for the Sea of Japan. As he neared the coast his engine stopped and he glided

to open water where he ditched. Rescue was made within range of the shore batteries by the USS CONWAY, DDE 507. LTJG Ed LANEY led rescue cover planes which engaged in thwarting fire from the beach which threatened the success of the rescue.

On 27 October the force retired to replenish.

On 28 October, seventy-three (73) missions were flown of which twenty (20) were a part of a coordinated strike against the enemy industrial targets atSONKHYON. Previous intelligence indicated intense and accurate flak and the possibility of enemy air opposition. The attack was carried out as follows. Jets and Corsairs assigned to the mission of ground fire suppression led off the dives on known gun emplacements. Immediately the ground fire was drawn to them the ADs assigned to bombing missions commenced their runs. Ground fire suppression was so effective that six (6) runs were made by the base element of which four (4) were bomb drops and two (2) were fire-bomb and napalm drops. Upon completion of the attack the strike group reformed and returned to the ship with the fighters flying cover. Of the aircraft launched on this mission none were hit with enemy fire. Later in the day while on a bridge assignment the F4U piloted by Ensign R. A. BATEMAN, USNR, of VF-53 was hit by flak. The burst came just under one wing and approximately ten (10) feet of the wing was destroyed. The aircraft began to gyrate violently and then dove to the ground and exploded on impact. No chance of survival was indicated and Ensign BATEMAN was listed as killed in action.

On 29 October, eighty-one (81) sorties were flown with rail cuts and bridges again the primary target for the day. One strike was scheduled to attack a strategic target located in the outskirts of the town of KAPSAN. One thousand pound bombs armed with VT fuzes obliterated the target consisting of sixteen (16) buildings.

On 30 October, eighty (80) sorties were flown against transportation targets. The harvest season had brought an increased amount of road traffic for the preceding three (3) days. This traffic in the form of trucks and carts drawn by beasts of burden afforded the communists excellent opportunity to smuggle supplies under the guise of fall crops. This opportunity was used by the enemy and attacks on carts and trucks brought secondary explosions and obvious oil and gas fires to indicate that military stores were in transit. The biggest number of rail cuts for a single day were made. Forty-three (43) cuts for this day and a total of over ninety (90) cuts for the past three (3) days.

On 31 October, the force retired to replenish. Following replenishment the ESSEX was relieved on station by USS BON HOMME RICHARD and the ESSEX proceeded to Yokosuka for maintenance, liberty and recreation.

DECLASSIFIED

31 October 1951

PART III: ORDNANCE

a. MACHINE GUNS

The ready ammunition lockers are not adequate for stowage of ready service ammunition. Belted ammunition is stacked in passageways and catwalks outside of stowage spaces. The present machine gun cleaning facilities are designed for 50 caliber machine guns. Conversion for 20MM use is being studied but space limitations are such that the problem is not easily resolved. Cleaning, oiling and handling has to be accomplished on the flight deck or hangar deck.

There are no spare part kits for 20MM guns. It is necessary to draw a new gun to replace parts which are broken. It takes six (6) man hours to depreserve new guns that are drawn. It takes another six (6) man hours to change the front mount adapter for the F4U-4B because all guns on board are equipped for the AD and F9F aircraft.

There is still a critical need for Oldsmobile feed mechanisms. At present it is necessary to repair the broken mechanisms or to scavenge feed mechanisms from downed aircraft. The only spare feed mechanisms aboard are the Davis type which were to be discarded in accordance with OML-GV-8-51. Nine out of ten of the faulty mechanisms are left-hand feed. All new feed mechanisms must be modified to fit the feed mechanism heaters which requires about four (4) man hours per feed mechanism.

After several incidents in which bombs were dropped in a safe condition because arming wires were being pulled from arming solenoids by the airstream at high speeds, the jet squadrons have adopted the policy of staying below 200 kts I.A.S., clear all surface units and energizing the arming circuits. This system has not been fully evaluated but indications are that it will solve the problem. The possibility of inadvertently releasing an armed bomb is realized and safety precautions have been stressed.

The gun chargers on the F4U-4B are unsatisfactory in that they cannot be charged or put in a safe position with any degree of certainty. An RUDAOE has been submitted and the F4U squadron has improvised a temporary installation to hold the charger more securely.

The 20MM machine guns on the ADs, F9Fs and F2Hs was excellent. There has been very little trouble with gun stoppages where installation of the New Oldsmobile gun feed mechanism has been accomplished. The F9F encountered some hydraulic failures which accounted for several stoppages.

DECLASSIFIED

b. BOMBS

Bomb skids are not suitable for pushing the length of the flight deck across arresting gear and barrier cables. It is felt that bomb skids should be equipped with pneumatic tires.

There is still a critical shortage of MK55 bomb racks on board. Once the MK55 racks have been fitted for use on a particular air foil it is difficult to convert for use on a different airplane making interchangeability undesirable.

The primary cause of hung-wing bombs on the F4U and AD aircraft has been a loose electrical plug connection between the wing and MK55 bomb racks. Although perfect fit is not obtained the electrical circuit will generally check but without a bomb attached. However when a bomb is installed the weight of the bomb will cause the electrical plug to pull out slightly and result in an unsatisfactory electrical connection. The F2Hs and ADs with the Aero 14A bomb rack have had a similar trouble when the Aero 14A rack was not properly secured to the wing and caused a poor electrical circuit resulting hung bombs.

On the AD aircraft there were two cases in which the ejector foot assembly and cartridge retainers in the bomb ejectors were lost when the cartridges were fired. A 1000# and 2000# bomb were carried on the center stations in these cases. The cause for these losses was the failure of the bomb ejector piston retaining key. A contributory factor to this key breakage was the tendency of the bomb ejector key clamp assembly to become deformed. This clamp assembly is checked each time the ejector is loaded. No spare keys or clamp assemblies are available on board which necessitates obtaining these parts from new complete bomb ejector units.

c. ROCKETS

Several cases have occurred in which the locking pins in the pigtail connections have failed when inserted in the igniter, resulting in a disconnected pigtail in flight and a hung rocket. It was found necessary to exercise extreme care while plugging in rockets to avoid damaging these pins.

The rocket pigtails continue to break even though they were taped to the rocket fin and the weak links were reinforced by taping arming wire splints. It is believed that the firing blast from the adjacent rocket plus the high slipstream speed contributes appreciably to the pigtail failure.

DECLASSIFIED

31 October 1951

d. Ordnance expenditures for the operating period are as follows:

MUNITIONS	F9F	F2H	F4U	AD	TOTAL
2000# GP				117	117
1000# GP				735	735
500# GP			233	140	473
250# GP			871	2237	3108
100# GP	631	562	659	491	2343
260# Frag			172	226	398
350# DB				10	10
6.5" ATAR		96	88	156	340
5.0" HVAR		60	457	121	638
3.25" SH				71	71
NAPALM			11	45	56
20MM	49,299	79,736	90,340	69,125	288,500
AN M12-INC				59	59

[redacted]

[redacted]

DECLASSIFIED

CVG-5/A16-13/(cfc)
S[redacted]al 072-51

31 October 1951

PART IV: DAMAGE*

DAMAGE TO ENEMY	DAMAGED	DESTROYED
TANKS	1	
TRUCKS	45	
LOCOS	11	8
OXCARTS		23
HWY BRIDGES	4#	
SUPPLY DUMPS	3	2
FACTORIES		1
WAREHOUSES	11	
BKS & BUILDINGS	19	102
GUN EMPLACEMENTS	16	19
VILLAGES		1
BOATS	3	6
RR YARDS	10	
RR TUNNELS	4	
RR TRACKS		557%
RR CARS	166	31
RR BRIDGES	10	23
TROOPS KILLED		384##
RR BY-PASSES	2	10**
FUEL DUMPS		1
VANS	2	2
COMMAND POSTS	1	

* These figures include only targets positively identified and the actual damage observed. Unobserved damage or unidentified targets are not tabulated.

\# Bridges with at least one complete break are counted as destroyed.

% Damages where tracks are broken or cratered are counted as rail cuts.

** Includes river beds where fords have been built up.

295 observed casualties and 89 estimated casualties based on dispatch reports from the ground forces in Korea.

[redacted]

29

b. DAMAGE TO OWN AIRCRAFT

DATE	TYPE A/C	DAMAGE	INFLICTED BY
		VF-51	
10-6-51	F9F-2B	Bullet Holes	Small Arms, 38 cal.
10-20-51	F9F-2	Frag Holes	Unknown
10-22-51	F9F-2B	Bullet Holes	50 cal.
10-24-51	F9F-2	Bullet Holes	12.7 MM
10-25-51	F9F-2B	Bullet Holes	20MM
10-26-51	F9F-2	Flak Holes	37MM
10-26-51	"	Bullet Holes	30 cal rifle
		VF-53	
10-5-51	F4U-4B	Bullet Holes	50 cal.
10-6-51	"	Bullet Holes	20MM
10-6-51	"	Bullet Holes	30 cal.
10-7-51	"	Bullet Holes	50 cal.
10-9-51	"	Frag Holes	Unknown
10-9-51	"	Bullet Holes	50 cal.
10-9-51	"	Bullet Holes	50 cal.
10-9-51	"	Ruptured #8 cylinder and push rod	50 cal.
10-9-51	"	Bullet penetrated exhaust stack	50 cal.
10-9-51	"	Bullet Holes	50 cal.
10-21-51	"	Frag Holes	Unknown
10-21-51	"	Frag Holes	Unknown
10-25-51	"	Bullet Holes	30 cal.
10-28-51	"	Plane crashed	37MM
10-29-51	"	Ruptured hydraulic line to landing gear	30 cal.
		VF-54	
10-4-51	AD-4L	Bullet Holes	20MM
10-6-51	AD-4	Loss of A/C due to AA fire	Tracers high explosives time fuzed.
10-9-51	AD-4L	Shell Holes	High explosive.
10-9-51	"	Frag Holes	High explosive
10-18-51	AD-4N	Severed wing flap	Armor piercing projectile
10-18-51	AD-4Q	Frag Holes	Unknown
10-18-51	AD-4	Frag Holes	Armor piercing projectile
10-24-51	AD-2	Bullet Holes	30 cal.- A
10-24-51	AD-4	Frag Holes	Unknown
10-24-51	AD-4	Bullet Holes	30 cal.- A
10-24-51	AD-4L	Bullet Holes	30 cal.-A

30

b. DAMAGE TO OWN AIRCRAFT

VF-54 Cont'd

DATE	TYPE A/C	DAMAGE	INFLICTED BY
10-24-51	AD-4L	Flak Holes	37MM - F
10-25-51	AD-4	Flak Holes	90MM - F
10-25-51	AD-2	Bullet Holes	30 cal - A
10-26-51	AD-4	Oil lines & engine damaged	37MM - F
10-26-51	AD-4NL	Flak Holes	37MM - E
10-28-51	AD-4L	Bullet Holes	50 cal.
10-28-51	AD-4	Bullet Holes	30 cal.
10-26-51	AD-2	Bullet Holes	30 cal - A
10-29-51	AD-4L	Bullet Holes	50 cal - A
10-29-51	AD-4	Bullet Holes	30 & 50 cal - A
10-29-51	AD-4L	Bullet Holes	20MM - A
10-30-51	AD-4	Frag & Bullet Holes	Unknown-E, 50 cal-A
10-30-51	AD-4	Flak Holes	Flak
10-30-51	AD-4	Port spar cap broken at hinge of port stub wing	Unknown - E

VF-172

10-4-51	F2H-2	Bullet Holes	30 cal. 20MM - EF
10-5-51	"	Bullet Holes	20MM - E
10-11-51	"	Stbd electrical coaxial cables and radio	50 cal - I
10-16-51	"	Planes destroyed	Unknown
10-22-51	"	Bullet Holes	30 cal.- A

PART V: PERSONNEL

a. OFFICER

A pilot factor of 1.5 for all squadrons is considered essential upon deployment. The attrition during the first two (2) operating periods has reduced the factor in two (2) squadrons to 1.3 and each of the other squadrons has lost pilots. It is believed that with a factor of 1.5 a squadron can complete a normal combat tour without replacements. At ComAirPac's dispatch request, CO, U.S.S. ESSEX made the following recommendations to CTF 77: "On basis of 2 Jet and 2 Prop squadrons 1.5 pilot factor recommended both types. 5 pilots for 3 plane and 6 pilots for 4 plane composite units. Present photo requirements make 6 pilots for 3 planes very desirable."

There remains a need for a qualified ground ordnance officer on the CVG staff. Previous recommendations have been submitted. The present operations require that a qualified ground maintenance officer be assigned to each squadron in order to attain the highest availability. Fighter Squadron FIFTY THREE is the only squadron in the Group that has not been assigned a ground maintenance officer.

b. ENLISTED

Difficulties have been encountered in operating with an on-board count below authorized allowance. The following is a break-down of the enlisted personnel status as to losses by transfers and discharges under current directives for the past month and the anticipated losses for the month of NOVEMBER:

SQUADRON	ALLOWANCE	ON BOARD	OCTOBER LOSSES	ANTICIPATED LOSSES
CVG-5	17	16	0	0
VF-51	119	114	4	3
VF-53	109	106	0	2
VF-54	132	124	3	7
VF-172	140	121	0	5
VC-3	30*	30	0	0
VC-11	28*	28	0	1
VC-35	43*	43	0	0
VC-61	20*	20	0	0
TOTALS	638	602	7	18

* This assumes the on board count for Composite Squadrons to be the allowance.

[redacted]

PART V: PERSONNEL

c. MORALE

Under the present heavy workload of continuous operations, the performance of all personnel has been excellent and morale has been a factor requiring no special attention.

d. CASUALTIES

The Air Group lost four (4) pilots during the reporting period as follows:

LTJG Cordice Isaac TEAGUE, 465417/1310, USN, VF-54. Aircraft hit by anti-aircraft fire during recovery from dive bombing run, crashed in flames. Killed in Action.

LCDR Irad Blair OXLEY, 165618/1310, USN, VF-172. Aircraft hit by anti-aircraft fire on Armed Recco flight. Exploded upon impact with ground. Killed in Action.

LTJG Samuel Richard CHESSMAN, 521324/1310, USN, VF-53. Received broken leg upon disembarking from damaged aircraft. Transferred to U.S.S. CONSOLATION.

ENS Richard Allen BATEMAN, 538138/1325, USNR, VF-53. Aircraft hit by anti-aircraft fire during glide bombing run, crashed and burned. Killed in Action.

e. READY ROOMS

As a result of the inadequate Ready Room situation a study was made of space and facilities to meet the demands of a fourth Ready Room. Ready 2, previously located in the forward end of the wardroom, was moved into the wardroom lounge, compartment A-212L. The movement of teletype, inter-communication unit, telephone, status board, etc., was accomplished without necessity of alterations. The end result was an adequate Ready Room which accommodates 27 pilots and has relieved the congested situation of two squadrons sharing Ready Room 4. The wardroom lounge in turn was moved to the space previously designated Ready Room 2 without undue interference with messing and the general concensus of opinion of officers is that it has advantages over the previous arrangement. The interest of the ship in accomplishing the move in exact conformance with the design suggested and the expeditious accomplishment of the work involved is worthy of special mention.

PART VI: OPERATIONS

This ends the second period for Air Group FIVE in the operating area, which was characterized by several changes in the methods of carrying out the primary mission, the interdiction of the enemy transportation system. During the first period in the operating area, key bridges were considered primary targets. During the second period rail breaking of main rail arteries was included as a target for interdiction. It is felt that by breaking rails away from town and AA emplacements that more damage could be inflicted to the enemy without exposure of strike group to intense AA. The enemy is still able to rebuild bridges and rail breaks in a surprisingly short period of time.

On 28 October 1951, a special strike mission was flown against an important supply center near KAPSAN, Korea. The strike was led by CCVG-5, and was composed of 4 F2H, 8 F4U, 8 AD of CVG-5 and 4 F9F, 8 F4U and 8 AD of CVG-15. The jets preceded the strike group in the attack, strafing and rocketing known AA positions, and were followed by the Corsairs armed with VT bombs for flak suppression. The AD elements armed with 1000#, 250#, napalm and incendiaries followed the Corsairs and bombed specifically assigned targets of warehouses and barrack areas. The evaluation of post strike photographs showed that 35% of the target completely destroyed, which is considered excellent for the number of aircraft involved. The tactics used were basically those of WWII. Although intense AA fire was encountered no aircraft were shot down although six runs were made. After each run a complete rendezvous of the strike group was made and the target approached from a different direction.

The F9F and F2H aircraft were used exclusively for fighter sweeps, armed reconnaissance and day CAP.

For Combat Air Patrol air controllers have been requested to give a 3-5 mile lateral offset followed by a pursuit curve intercept with a straight-away of one to two miles on low speed targets (below 250 knots). This provides jet interceptors with a tactical advantage over the prop fighters and attack airplanes without the hazard of pulling in front of the bogies as has happended consistantly when planning the intercept for the beam or ahead of the beam attack position. Furthermore, when bogies altitude information is poor (the rule rather than the exception), the CAP is better able to search through a greater altitude differential between 10 and 2 o'clock. It is not unusual for the CAP to be vectored at 20,000 feet for a bogie of unknown altitude and for the CAP to sight the bogie at 2,000 to 4,000 feet. It is extremely difficult to search directly below and/or behind in the F9F and F2H.

[redacted]

DECLASSIFIED

PART VI: OPERATIONS

The four (4) pilot photo team from VC-61 remained on top for total missions per pilot. The detachment had excellent results and added greatly to the success of the mission.

The detachment from VC-11 continued to fly the Anti-Sub Patrol for the defense of the task group without incident.

The F4U4Bs were used for Naval Gun Fire Spot, Strike Missions, Weather Recco and a few CAP flights. The AD-4s were used for strike missions and Anti-Sub Patrol escorts. The F4U and AD bombing accuracy improved considerably during this period.

Long delay fuzes, 8 to 15 seconds, were used several times during this period with very effective results. It allowed the pilots to make drops at a minimum altitude and a slower air speed, resulting in greater damage per bomb dropped. These low level drops were made in open country as well as in mountainous terrain.

Over-crowded communication channels still remain a handicap under the present operating conditions. A request has been made to CTF-77 for the assignment of a separate air tactical channel.

Both jet squadrons are convinced of the value of carrying 100 or 250 pound bombs instead of rockets. Rocket targets have been almost non-existent since arriving in the Korean Area in August. Bombing accuracy improved steadily and the total destruction and damage results was gratifying.

The bombing, strafing and rocket attacks with the Banshee are made from altitudes of eight to twelve thousand feet, in dives of forty to sixty degrees. This procedure results in better accuracy with bombs and rockets, more effective strafing due to impact angle and time on target and, with simultaneous runs from various directions, affords AA protection by dividing the fire and reduces the enemy's overall firing time to a minimum.

The night detachments on board did an outstanding job during this period. The night hecklers found lucrative targets on the early morning flights that resulted in strike flights being diverted to help destroy enemy trains during the day.

All Night Heckler missions were conducted in two plane sections. Various tactical procedureswere evaluated and tactics employed by this team were the result of compromise. The state of the weather, of course, was an all important factor. On clear nights it was practicable to break the section into single plane units, each plane harassing the enemy individually. The two planes stayed within five to ten miles of each other. Contact was maintained by spotting of bomb blasts and flare drops, previously arranged

rendezvous points, and visual navigation. The planes, under these conditions, were able to assist one another at all times. In case of inclement weather, all the above listed means of maintaining contact broke down, and it was essential that the section remain intact.

The only way to do this over land is to fly in standard tactical formation, all lights off. Although this was not found too difficult for the wingman, in so doing he lost his ability to navigate and search for targets.

The night detachments on board are evaluating a method of recovery of aircraft on a black night with little or no horizon. It is believed that a dangerous situation exists using the break-up procedure outlined in current USF publications, beginning when the section passes close aboard the starboard side and continuing until the 180° turn to the downwind leg is completed. The wingman at night must immediately go from flying a contact wing position to instrument flying with the ever present possibility of vertigo at a very low altitude. During the first period in combat the VFN detachment aboard lost an F4U under such conditions.

To alleviate or eliminate this situation, the following procedures are recommended.

a. Sections should maintain a race track pattern along the ship's heading. Break-up should be made in level flight going downwind at a minimum altitude of 500 feet using a twenty second interval. Using this procedure, each pilot has an opportunity to remain oriented with the lights of the duty carrier and plane guard; it also gives each pilot an opportunity to prepare for his approach with ample time to set up for instrument flight prior to going to the 300 feet required at the normal break-up point. By starting the turn to the downwind leg close ahead, no confusion exists as to the position of the carrier or to the plane guard destroyer which is used as a turning reference. (See next page for diagram).

b. Time involed using the above procedures compares favorably with the standard procedures recommended by current USF's.

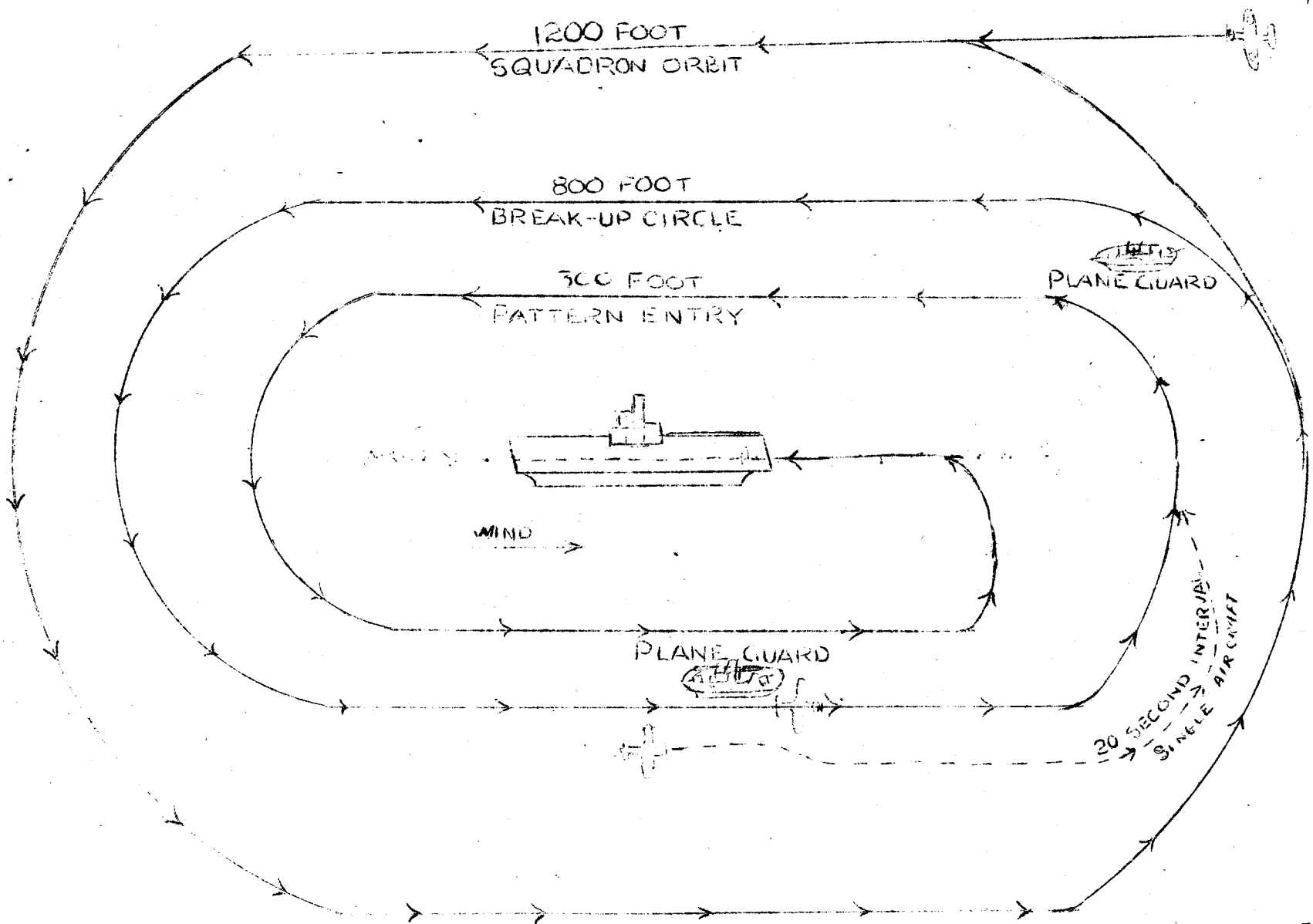
1200 FOOT
SQUADRON ORBIT
800 FOOT
BREAK-UP CIRCLE
300 FOOT
PATTERN ENTRY
PLANE GUARD
WIND
PLANE GUARD
20 SECOND INTERVAL
SINGLE AIRCRAFT

PART VII: MAINTENANCE

a. JET MAINTENANCE

F2H-2 maintenance offered no serious problems for the reporting period. One aircraft sustained a hit from a .50 caliber bullet in the rudder cable coupling assembly which resulted in the aircraft being AOG for a period of ten days. Equipment for repairing the damaged cables was not available. F2H-2 catapult hook difficulties has been reported by separate correspondence.

It is evident from experience in attempting structural repairs that high shear rivet facilities and heat treating ovens for small parts should be installed on aircraft carriers. Such equipment would facilitiate repair thereby eliminating the importance of delay intransport of spare parts or replacement aircraft.

F9F-2 maintenance problems were confined to two instances. Fuel contamination was discovered in one aircraft following a flight during which the fuel low boost warning light indicated fuel bypass of the low pressure fuel filter. The filter was removed and found clogged with an unknown substance. After cleaning the filter and conducting a half-hour turn-up the aircraft flew an hour and half test hop successfully. The aircraft was then kept on deck for about a week after which a turn-up was not satisfactory, the engine RPM being restricted to 15%. Investigation revealed the fuel pressurizing and shut-off cock badly corroded. The fuel cell was opened and found to contain large amounts of the same unknown contaminating substance. The upper main fuel pump and the turbo-jet control were corroded and not functioning properly. All fuel control units were replaced by new units and the engine checked carefully. A sample of the contaminated fuel was analyzed by ComServPac and the report stated that the sample contained 115/145 AvGas and salt water. It further stated that the salt water contained organic matter similar to that normally found in bottoms of shore aqua systems using salt water displacement.

A flame-out occurred (the first that VF-51 has experienced) at twenty thousand feet during an acceleration from 84% to 97%. Apparently it was caused by the sticking of the barometric control. To eliminate recurrence a check of the barometric control unit was placed on the thirty hour check list. It is believed that the failure was caused by the poor lubricating qualities of 115/145 octane gasoline with 3% lube oil and by the infrequent use of the barometric unit since the majority of flights are conducted at altitudes less than 10,000 feet.

PART VII: MAINTENANCE

b. CONVENTIONAL MAINTENANCE

A great deal of maintenance on propeller driven aircraft was accomplished on the flight deck. This increased the speed of repair making it possible to fly the repaired aircraft on subsequent launches the same day.

A critical shortage of vacuum relief valves (P/N R-82-CV-VS-13361) for the F4U-5NL developed early in the period and two aircraft were AOG for seventeen days until replacement parts arrived. This AOG situation was alleviated by the use of F4U-4Bs as night hecklers, but is not recommended as a general practice.

c. GENERAL

The handling of current fleet aircraft on board CV 27A conversions is constantly threatened by extremely small clearances both with the overhead on the hangar deck and with other aircraft since parking in minimum space is an absolute necessity. Hangar deck and flight deck crashes must be minimuzed by constant training of the men involved in handling aircraft.

Flak and ground fire damage accounted for approximately forty per-cent of the maintenance work done during the operating period.

Except for the above mentioned parts there were no critical shortages. This was due to the cooperation and efficiency of the Aviation Supply Office on board. Those parts of which future shortage is indicated by past usage data have been ordered.

31 October 1951

PART VII: MAINTENANCE

d. SPECIAL STARTING PROCEDURE FOR JET AIRCRAFT

On 5 October 1951, 2 F2H-2 aircraft were forced to land at K-18 for tail hook repairs. No facilities were available for starting the aircraft, after completion of repairs were available at K-18. An AD-4Q that had been adapted for just this occasion, as described below, was dispatched to K-18 from the ship on the morning of 6 October 1951, to start the F2H-2s. The pilot and crewman of the AD-4Q were briefed with all pertinent instructions as below. A normal start of both F2H-2s was made. The pilot of the AD-4Q stated that no apparent overload was placed upon his electrical system. Pilots of the F2H-2s stated that the power source was adequate for a good jet start. Investigation of all portions of the adapter assembly showed no indication of overheating. The procedure and material required are as follows:

(1) INSTALLATION PROCEDURE

a. Remove main DC Buss.
b. Construct, from 1/8" copper plate, a new main DC buss ½" longer than the original. Drill one ¼" hole in extended portion of buss.
c. From 3' of AWG 2/0 cotton covered rubber insulated cable, manufacture 2 cables, with terminal lugs, 14" long. Manufacture 2 cables, with terminal lugs, 4" long,
d. Manufacture a standoff bracket providing 1" clearance to hold AN-2552-3A receptacle, to be mounted on starbaord side of A/C just aft of station 96.000 and mounting shelf, utilizing present access plate mounting bolts.
e. Install insulating material under desired mounting of brackets manufactured in step d.
f. Install AN-2552-3A receptacle on bracket.
g. Mount bracket and receptacle on insulating material.
h. Install two 14" cables, manufacture in step c, between end of main DC buss, manufactured in step b, and center pin of AN-2552-3A receptacle.
i. Install DC buss (steps b & h) in place of DC buss removed in step a.
j. Install two 4" cables, manufactured in step c, between large end pin of receptacle and frame of aircraft.

[redacted]

4D

PART VII: MAINTENANCE

d. SPECIAL STARTING PROCEDURE FOR JET AIRCRAFT

(2) MATERIAL REQUIRED

a. One AN-2552-3A receptacle.
b. Copper plate 1" x 6" x 1/8".
c. Sheet aluminum 2½" x 12" x 1/16".
d. 36" AWG # 2/0 DCC rubber insulated wire.
e. 8 solder terminal lugs to fit AWG # 2/0 wire.
f. 4 8/32 7/16" bolts and nuts.
g. 1 ¼/24 ½" bolt and nut.
h. 1 sheet 1/16" insulating material 4" x 6".

(3) USAGE PROCEDURE

a. AD-4Q engine idling.
b. All switches in Jet "OFF".
c. Install jumper cable between receptacle in AD-4Q right "Hell hole" and jet starting receptacle in jet aircraft.
d. Jet pilot turns battery switch ON and gives "4Q" pilot "Thumbs-Up".
e. "4Q" pilot turns "OFF" battery switch and "revvs-up" engine to 2000RPM - gives jet pilot "Thumbs-Up".
f. Jet pilot turns "ON" start switch and utilizes normal starting procedures - gives "4Q" pilot "Cut" after start is made.

[redacted]

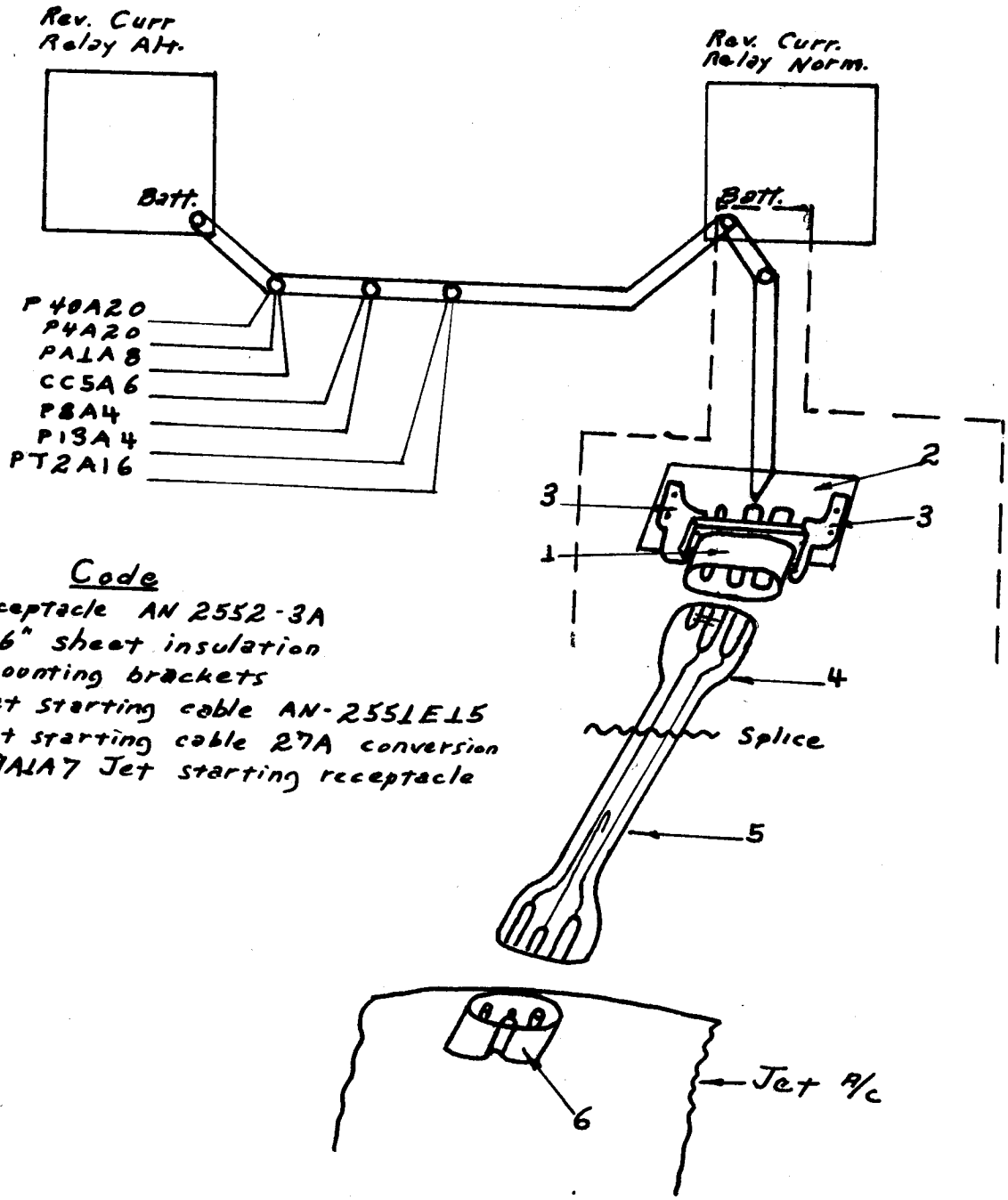

Code

1. Receptacle AN 2552-3A
2. 1/16" sheet insulation
3. Mounting brackets
4. Jet starting cable AN-2551E15
5. Jet starting cable 27A conversion
6. 49A1A7 Jet starting receptacle

Encl. (1)

[redacted]

DECLASSIFIED

SQUADRON	TOTAL COMBAT HRS. THIS PERIOD	AVER. COMBAT SORTIES P/PILOT THIS PERIOD	AVER. COMBAT HRS. P/PILOT THIS PERIOD
VF-51	456.8	12.3	21.7
VF-172	446.6	12.5	20.7
VF-53	971.7	14.4	44.2
VF-54	1032.3	12.7	38.2
VC-3	166.9	11.0	33.4
VC-11	147.2	10.0	29.2
VC-35	210.3	13.6	42.1
VC-61	120.8	18.5	30.2
TOTALS	3552.6	13.1	32.5

FLIGHT SUMMARY BY SORTIES

A/C	F9F-2	F9F-2P	F2H-2	F4U-4B	F4U-5NL	AD-4	AD-4W	AD-4N	TOTALS
SQD	VF-51	VC-61	VF172	VF-53	VC-3	VF54	VC-11	VC-35	
NGF				62		6			68
STRIKE				240	13	312		7	572
CAP	97		66	8					171
RECCO	103		164						267
FIGHTER SWEEPS	20		12						32
PHOTO		74							74
PHOTO ESCORT	47		29						76
ASP							48		48
ASP ESCORT						20	2	26	48
WEATHER RECCO				2	2			2	6
NIGHT HECKLER					39			31	70
TOTAL	267	74	271	312	54	338	50	66	1432

M. U. Beebe

M. U. BEEBE

43

[redacted]