PB2Y Coronado

By Hal Andrews

Among the Navy's WW II operational flying boats, the Consolidated PB2Y *Coronado* has always received the least recognition. Produced in smaller numbers than its contemporaries, the PB2Y served with distinction in Pacific combat and Atlantic antisubmarine warfare (ASW) operations, but its unique service was as a major transport and hospital evacuation airplane, using its capacious hold to advantage. Early problems and the advent of long-range, land-based patrol planes led to cutbacks in PB2Y production, and overshadowed the fact that, on a "per airplane in service" basis, *Coronados* ranked among the most versatile and effective WW II naval aircraft.

Like many WW II airplanes, the PB2Y traces its beginnings to the mid-1930s. With production PBYs ordered in 1935, BuAer turned to the next step in flying boats. Two experimental, four-engined prototypes were ordered in mid-1936: the Sikorsky XPBS-1 and the Consolidated XPB2Y-1. Similar in overall design, both were high-wing, cantilever monoplanes, with single tails and wing tip floats, a nose and tail manual gun turret and bomb bays in the inboard wings. Both used 1,050-hp Pratt and Whitney R-1830 twin Wasp engines. While Sikorsky's used fixed-wing tip floats, Consolidated's continued the retractable scheme used on the PBY.

Rolled out of Consolidated's San Diego, Calif., plant, the XPB2Y-1 first flew in December 1937, experiencing directional stability and control problems. Two auxiliary fins mounted on the horizontal stabilizer failed to cure the problems, and a completely new twin tail assembly was installed, featuring circular planform vertical surfaces on the tips of horizontals mounted with dihedral to a stub fin. The problems solved, the Navy Board of Inspection and Survey (BIS) trials began at NAS San Diego in August 1938. In late October, trials were interrupted for a cross-country round trip to NAS Anacostia, D.C., where the XPB2Y-1 was among the military aircraft inspected by President Franklin D. Roosevelt. The

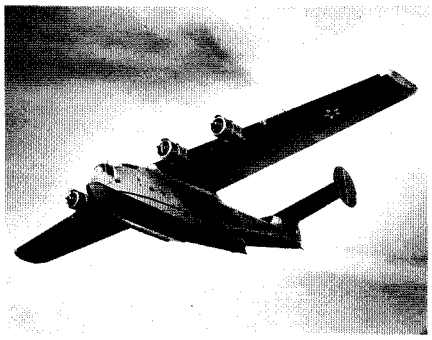

XPB2Y-1

uniqueness of a large flying boat making nonstop transcontinental flights prompted a great deal of press/newsreel attention. Some damage caused by landing into a large Pacific swell brought the trials to a close in December, after which repairs and changes were completed and the airplane accepted in early 1939. It became a flag plane for the fleet's Aircraft Scouting Force later in the year, and served through the war as a VIP transport.

Consolidated was selected for the production contract, awarded in March 1939, but limited to six airplanes, largely due to the high cost. The production airplanes, PB2Y-2s, were almost a whole new design. They did retain the wing, with four engine nacelles, wing-tip floats, and internal bomb bays for eight 1,000-lb. bombs and provisions for carrying four more, or two torpedoes, on underwing racks. The new hull was much deeper and straight sided; rectangular sections were added to the middle of the vertical fins and rudders, the bow turret was a new ball type, and a dorsal blister was mounted just aft of the wing, resulting in a very different appearance. The six gun positions of the XPB2Y-1, including the tunnel gun, were retained, each now equipped with one .50 gun. New R-1830 engines were capable of 1,200 hp and were two-stage supercharged for increased performance at altitude. The added power hardly compensated for the considerably increased weight.

Following initial flight tests, VP-13 received its first in December 1940, and BIS trials began at San Diego in January 1941. Trials were completed in May except for rough water tests to be completed later. By summer, five PB2Y-2s had been delivered to VP-13, the initial ones resplendent in the colorful paint scheme and markings of the thirties, while all soon appeared in camouflage. The sixth was being converted to prototype the changes planned for 200 PB2Y-3s, ordered in November 1940. While only a handful existed, VP-13's PB2Y-2s played a major role in early U.S. WW II Pacific activities. Stripped of much of their military equipment, VP-13 operated them as high-priority transports from the West Coast to Hawaii and on across the southern route to Australia until the newly formed Naval Air Transport Service (NATS) took over – presaging the PB2Y's major role with NATS. By this time, with the naming of U.S. military aircraft, the PB2Y had become the *Coronado*.

The PB2Y-3s featured increased armament, armor and fuel tank protection. No increase in engine power accompanied the changes and the mission performance of the *Coronado* suffered accordingly. The XPB2Y-3 flew late in 1941 and was delivered soon after Pearl Harbor. Production of -3s was in its early stages by this time, with changes arising from trial results and wartime requirements being incorporated. The first production airplane was delivered in June, by which time the XPB2Y-3 had been consigned to conversion to the XPB2Y-4 with four 1,600-hp Wright R-2600s. Of 626 *Coronados* on order by this time, 54 would be -4s with the increased power restoring the desired performance. Two hundred were ordered under lend lease, with 50 specifically for Britain's RAF.

Following initial delivery of a production -3 in June, accelerated service trials began. By September, it was evident that a good many problems required correction, including leaking integral wing fuel

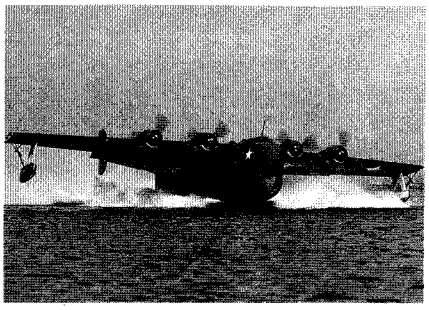

PB2Y-3R

tanks and inadequate range with self-sealing tanks. With production accelerating, and a need for transports, 29 of the first 60 airplanes off the line would be stripped as transports, others used for training and VP-13 receiving 12 as the first combat squadron. One would join the XPB2Y-1 as a flag transport.

At the end of the year, VP-13 deployed to Hawaii for operations. The service test problems followed, the leaking tanks causing grounding of the *Coronados*. While operations, both in the fleet and as transports, demonstrated the PB2Y's capabilities, the continuing problems gave the airplane a negative image in fleet commands. In spite of the problems, major accidents were rare compared to many military types during the rapid build-up of training and operations.

In the spring of 1943, Pacific Fleet interest in large land-based patrol aircraft, along with changing British requirements, resulted in cutbacks of PB2Y-3 production to a total of 210 airplanes, with 98 to NATS and 35 for the British. By this time, three of the four planned patrol squadrons were flying *Coronados*, VP-15 being the first of two planned AirLant squadrons. Along with two NATS squadrons, both Pan American and American Export Airlines were operating the early transports – initially designated as JRY-1s in early 1943 but redesignated as PB2Y-3Rs in the summer.

Late summer brought the PB2Y problems to a head. VP-15 had deployed to Bermuda for ASW operations and was recalled to New York due to fuel tank leakage, and production acceptance of the remaining PB2Ys stopped. Major attention was focused on a solution to the wing tank leakage problem. Different solutions applied to different blocks of airplanes. Some got synthetic rubber cells installed in their tanks, others new sealing compounds. Combat airplanes got self-sealing fuel cells. Fuel tanks in the hull made up for lost fuel volume. Rework was done by both Consolidated-Vultee and Rohr Aircraft. For the transports, single stage R-1820-92 engines were installed since higher altitude capability was not required and the weight saved allowed increased payloads.

By the end of 1944 the fix programs were well under way. The last 41 *Coronados* off the production line were moved directly to Rohr where they would be completed and delivered as transports. To offset the increased weight of armament, armor and electronics in the combat PB2Y-3s, the engines were also changed to single stage -92s. Some airplanes were converted to hospital evacuation and rescue configuration and others as flagships, both with combat equipment stripped. The -92 engined airplanes were redesignated as PB2Y-5s, with transports -5Rs, evacuation rescue 5Hs, and flagships -5Fs. As the reworked airplanes went into service, the *Coronados* finally proved their worth, both in combat and as transports. The British, having used 10 *Coronados* delivered to them as transports, returned the other 25 which went through the mod program and into Navy service.

Meanwhile, the R-2600 powered XPB2Y-4 had demonstrated the *Coronado*'s potential with increased power. Another PB2Y-3 was converted to the XPB2Y-6 with the PB4Y-2's R-1830-94 engine installation. While also showing improved performance, the benefits were not sufficient to warrant a new conversion program.

The combat -5s with VP-13 and VP-102 in the Pacific had an outstanding combat record, including extended range bombing missions and a recorded tally of 11 enemy aircraft shot down. The evacuation -5Hs brought out many wounded from the Pacific island battles, and the transports fed the needs of the U.S. forces as they reconquered territory lost to the Japanese. Jet assisted takeoff was regularly used to get heavier loads off the water.

As land-based R5D transports became available in early 1945, NATS' PB2Y requirements were cut back, and early transport airplanes were salvaged for spares. With times like 4,000 hours in their logs, they had more than shouldered their share of the load in spite of the initial problems. Two PB2Y-5Hs were assigned for Coast Guard search and rescue operations, as the modification program approached completion after V-E Day. Following V-J Day, the PB2Ys were retired rapidly and scrapped, the last by the end of summer 1946. Only two surplus *Coronados* remained in existence, one of which is now in the National Naval Aviation Museum at Pensacola, Fla. ■

PB2Y

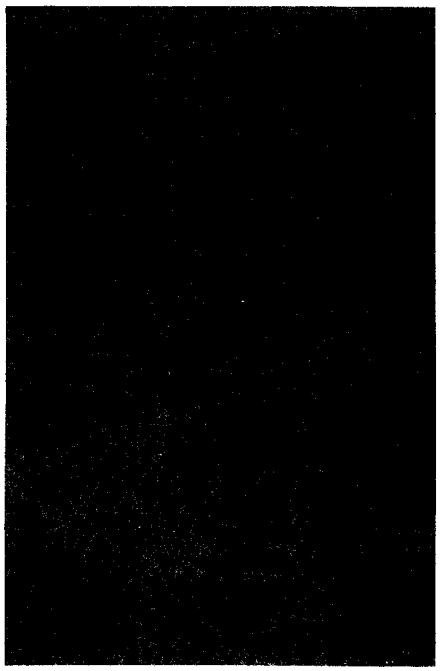

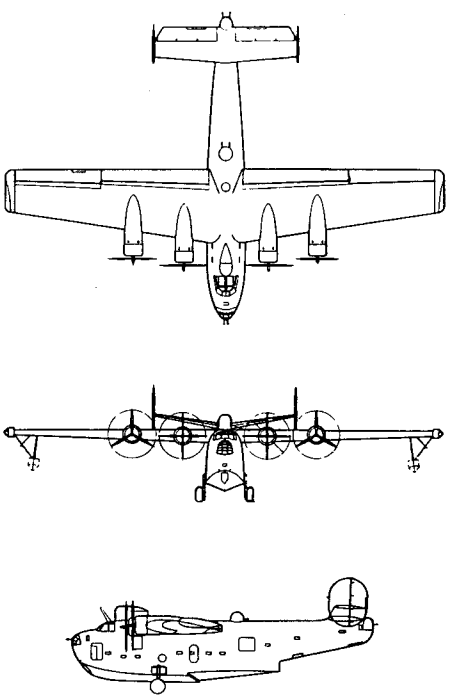

AIRPLANE CHARACTERISTICS & PERFORMANCE

BUREAU OF AERONAUTICS, NAVY DEPT.

COLUMN NUMBER		1	2	3	
LOADING CONDITION		CARGO TRANSPORT	CARGO TRANSPORT	PASSENGER TRANSPORT	
GROSS WEIGHT	LBS.	68000	68000	68000	
EMPTY WEIGHT - Calculated	LBS.	35693			
FUEL / OIL	GALS.	1501/84	4360/240	3226/180	
FIXED USEFUL LOAD	LBS.	2669		3599	
PAYLOAD	LBS.	20000	1678	8000	
ENGINE POWER USED FOR PERFORMANCE		NORMAL	NORMAL	NORMAL	
WING LOADING	LBS./SQ.FT.	38.2	38.2	38.2	
POWER LOADING ①	LBS./BHP.	16.2	16.2	16.2	
V-MAX. SEA LEVEL	MPH.	198	198	198	
V-MAX./CRITICAL ALT.	MPH./FT.	212/7000	212/7000	212/7000	
V-STALL GROSS WEIGHT ②	MPH.	76.1	76.1	76.1	
V-STALL WITHOUT FUEL ②	MPH.	70.8	59.8	64.4	
TIME-TO-CLIMB -10000 FT.-	MIN.	23.3	23.3	23.3	
TIME-TO-CLIMB -20000 FT.-	MIN.				
SERVICE CEILING	FT.	13100	13100	13100	
TAKE-OFF DISTANCE -CALM-	FT.				
TAKE-OFF DISTANCE -15 KN.-	FT.				
TAKE-OFF DISTANCE -25 KN.-	FT.				
TAKE-OFF DISTANCE -50 FT. OBST.	FT.				
TAKE-OFF TIME	SECONDS	80	80	80	
RATE OF CLIMB -SL-	FT./MIN.	490	490	490	
MAX. RANGE / V-AV. ③	ST. MI./MPH.	1240/150	3780/156	2760/154	
RANGE / V-AV. -60%NSP-③-	ST. MI./MPH.	1230/162	3700/168	2710/166	
SEARCH RADIUS / V-AV. -20%R-	NMI./KN.	NOTE: WEIGHTS AND PERFORMANCE INCLUDE DE-ICING EQUIPMENT.			
A.S.W. RADIUS / V-AV. -20%R-	NMI./KN.	Removal of de-icer boots increases V max/SL by 3 mph. and			
SCOUT RADIUS	N MI.	max. range at 1500 ft. by 1.9 percent			
COMBAT RADIUS	N MI.				

ENGINE / PROP. GEAR RATIO: 4 P.& W. R-1830-92 (16:9)

ENGINE RATING BHP/RPM/ALT.	
NORMAL	1050/2550/SL-7000
TAKE-OFF	1200/2700

NOTES

Performance is based on flight test. Range is based on engine requirement fuel consumption date increased by 15% to conform with past experience.

WEIGHT EMPTY includes de-icing equipment and 550# of radio equipment

PAYLOAD - Passengers cargo and baggage

FIXED USEFUL LOAD - Crew, trapped fuel and oil and equipment (col. 3 F.U.L. includes seats & pass. equipment)

NOTE: Weights and Performance based on use of small wing-tip float. Installation of 4160# displacement float reduces max. range at 1500ft. by 1% and Vmax/SL by 2mph

TANKAGE IN GALLONS		OIL	FUEL
FIXED	PROTECTED		
	UNPROTECTED	260	4360
	TOTAL-FIXED INTERNAL	260	4360
AUX.	DROPPABLE		
	DROPPABLE		
	TOTAL	260	4360

NOTE
- STATUTE MILES USED-EXCEPT-RADIUS IS GIVEN IN NAUTICAL MILES & KNOTS
- ① BHP AT MAX. CRIT. ALT.
- ② STALL-WITH POWER
- ③ AT 1500' ALTITUDE

Performance with one engine inoperative (flaps & landing gear up, propeller feathered) is estimated to be

GROSS WEIGHT	68000#
R/C - SL - T.O. power	175 fpm
Service Ceiling - Normal Power -	1000 ft. @ 64250#

DECLASSIFIED

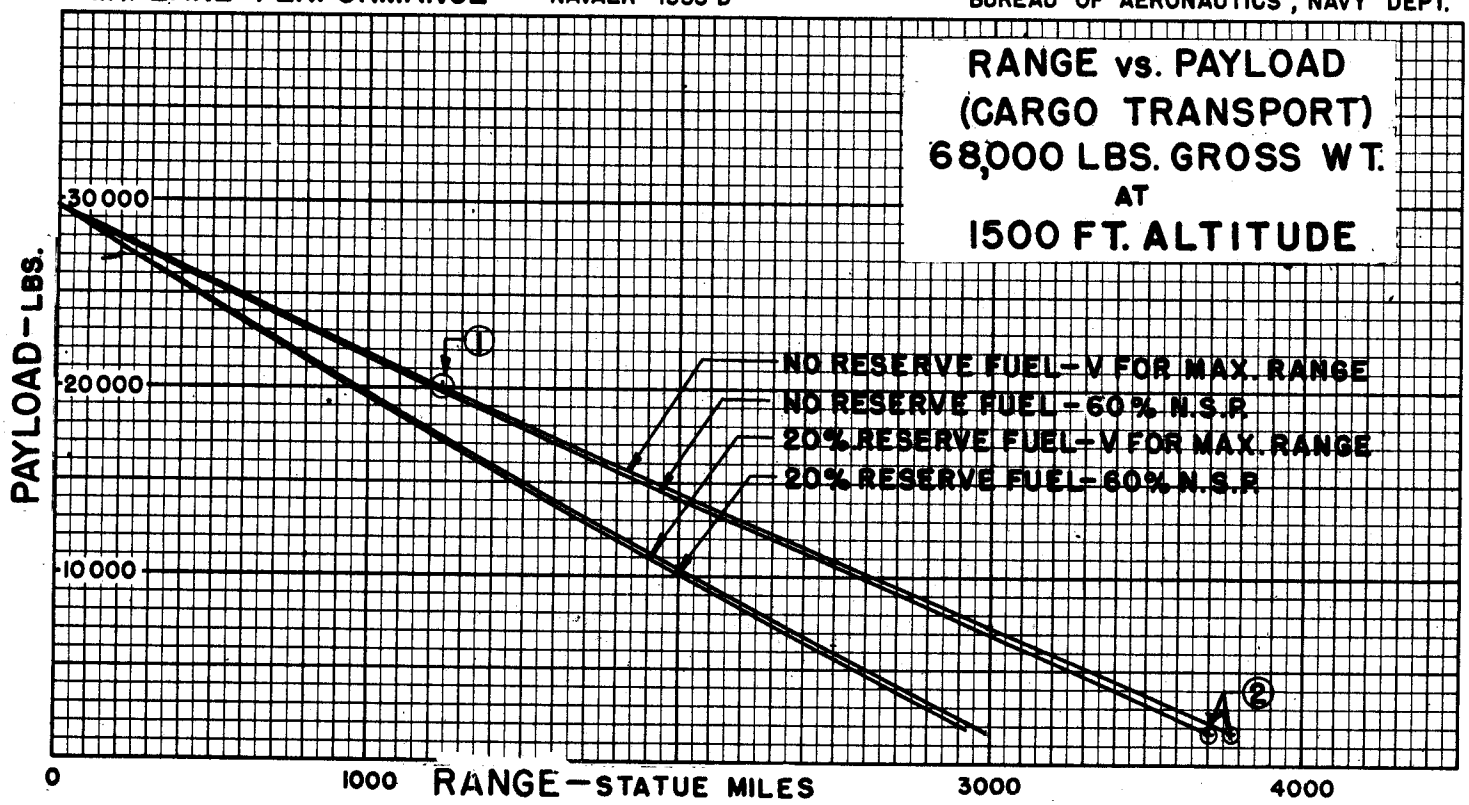

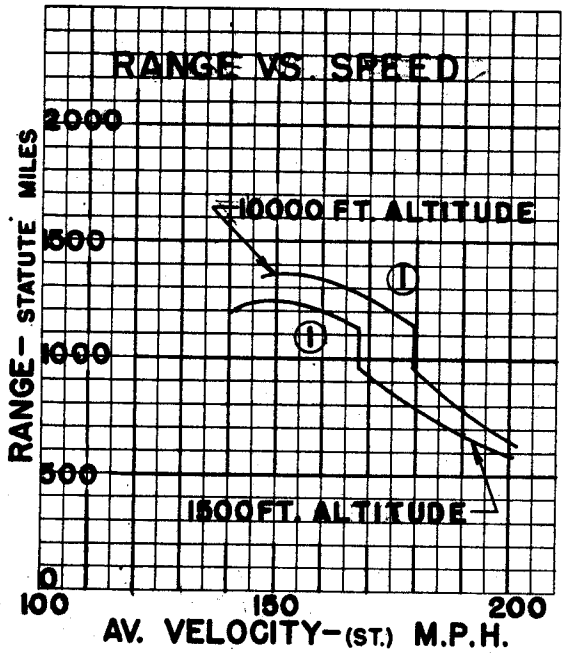

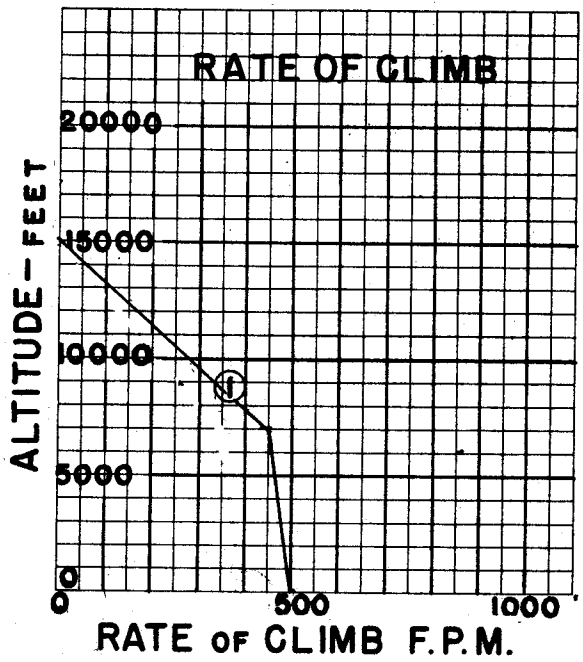

○ LOADING CONDITION COLUMN NUMBER

BUREAU OF AERONAUTICS
NAVY DEPARTMENT

WING AREA- 1780 SQ. FT.
WING SECTION-
N.A.C.A. 23017-23009.6
M.A.C.- 194.3"
PROPS.- CURTISS C.S. 3 BLADES-
BLADE DES. NO. 89324
CURTISS C.S. 4 BLADES-
BLADE DES. NO. 714-12
HULL DISPL.- 455,000 LBS.
WING TIP FLOATS DISPL.-
EARLY AIRPLANES-6520 LBS. (TOTAL)
LATER AIRPLANES AND FOR
REPLACEMENT- 8320 LBS. (TOTAL)

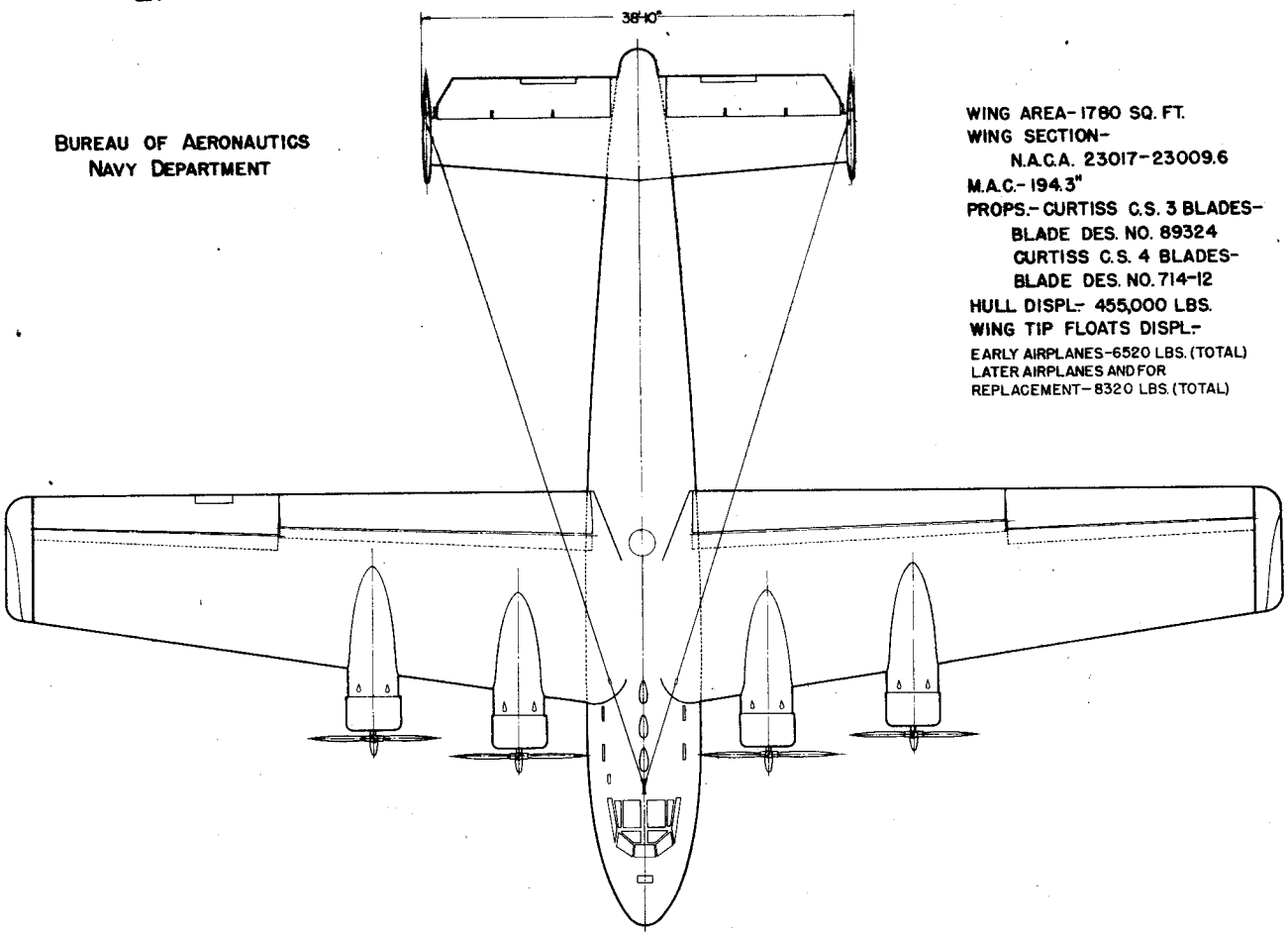

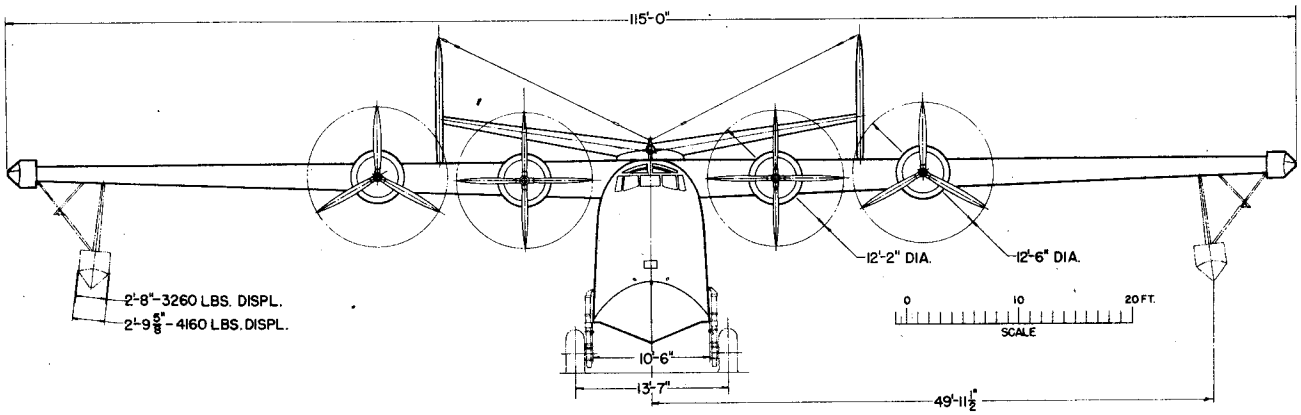

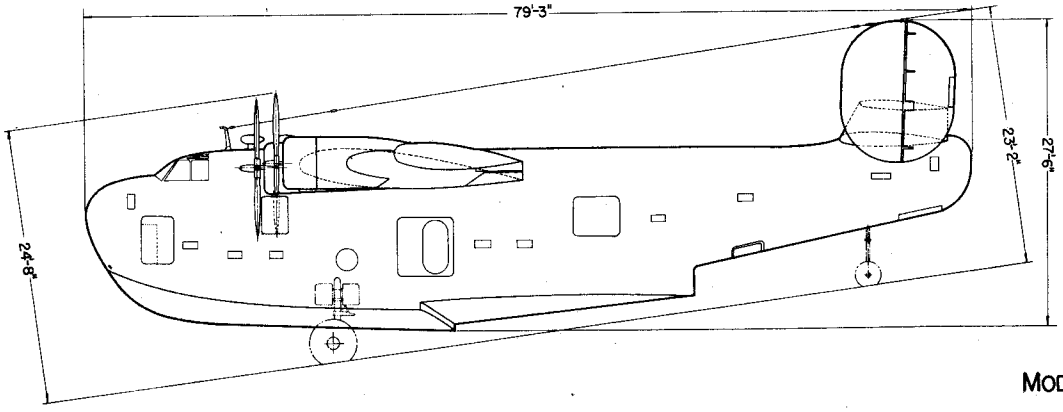

MODEL PB2Y-5R