PRINCIPAL DIMENSIONS

EXTERIOR

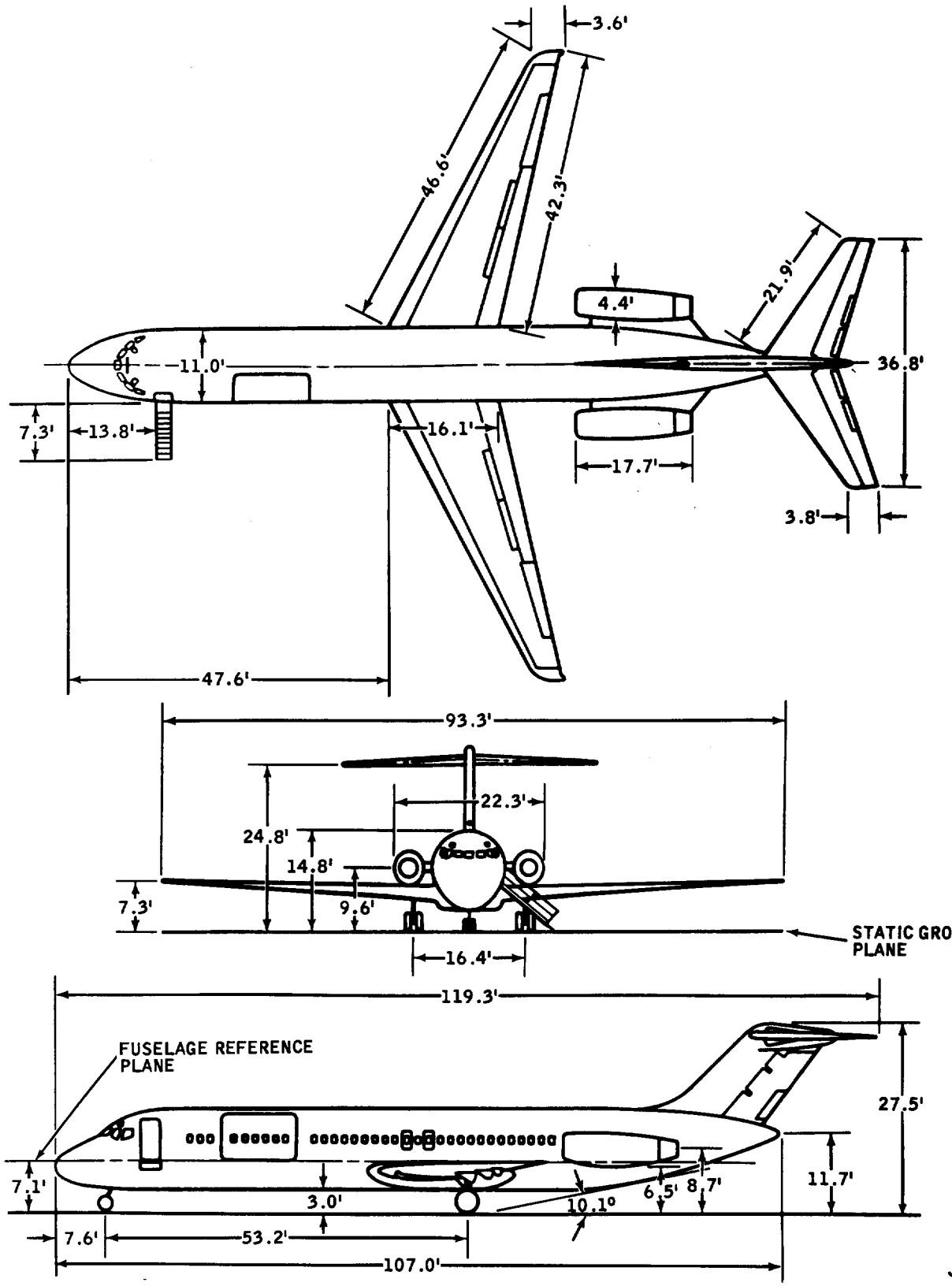

Figure 1-1. Principal Dimensions (Sheet 1)