Standard Aircraft Characteristics

NAVY MODEL
T-39D
AIRCRAFT

THIS PUBLICATION SUPERSEDES NAVAIR 00-110AT39-1 DATED 1 JULY 1967
WHICH SHOULD BE REMOVED FROM THE FILES AND DESTROYED.

PUBLISHED BY DIRECTION OF THE
COMMANDER OF THE NAVAL AIR SYSTEMS COMMAND

JANUARY 1970

REPORT NO. NA-62-554

SERVICE

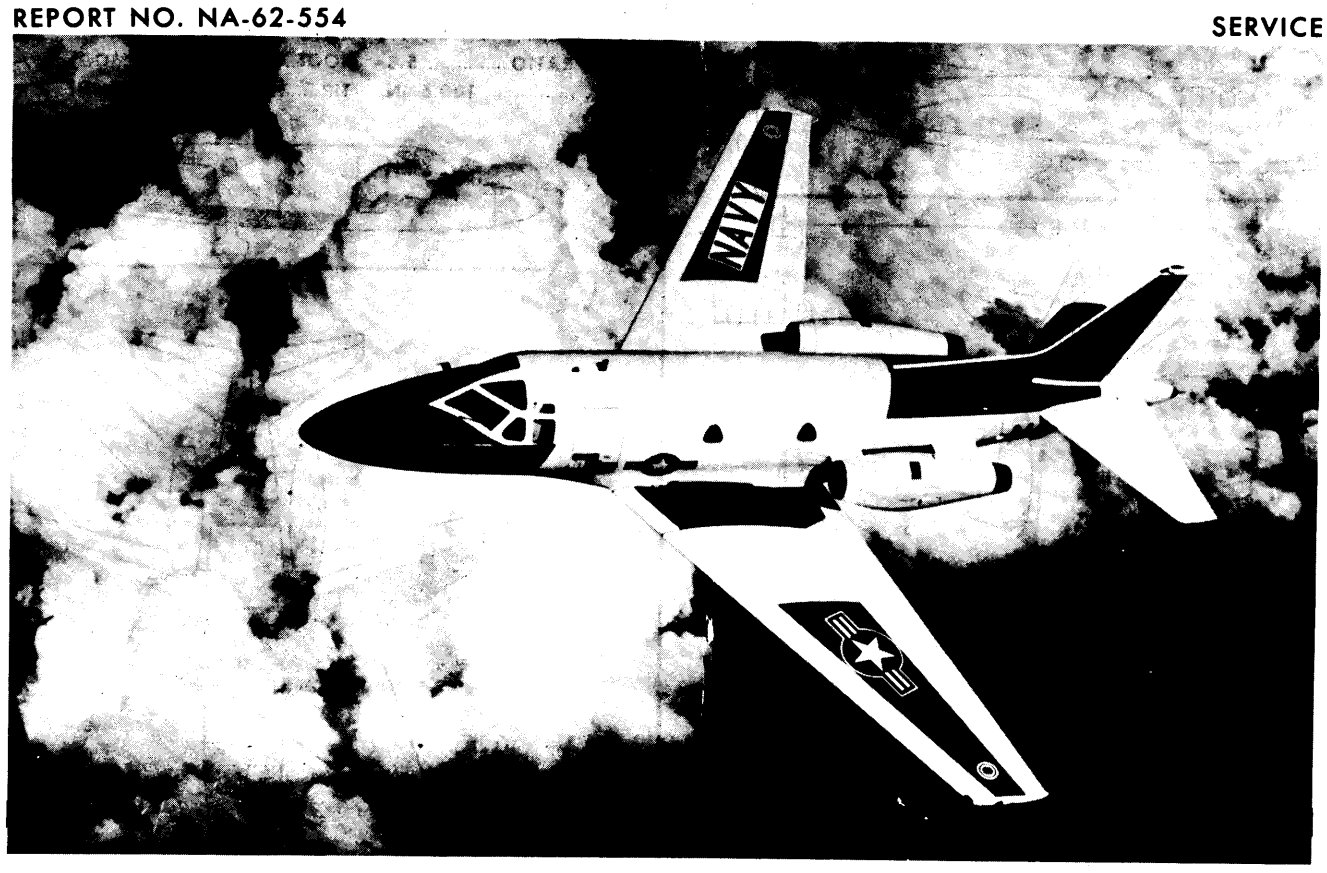

STANDARD AIRCRAFT CHARACTERISTICS

T-39D

NORTH AMERICAN AVIATION, INC

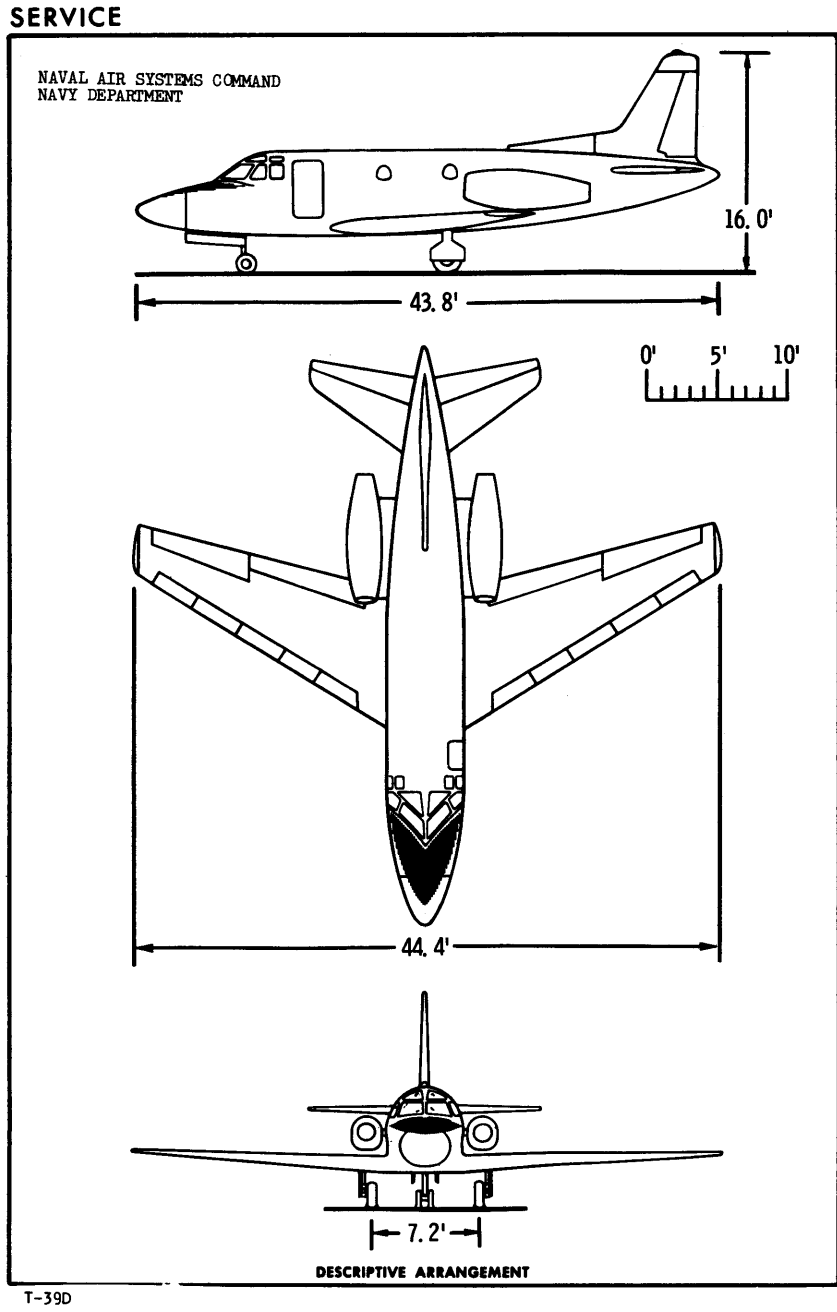

DESCRIPTIVE ARRANGEMENT

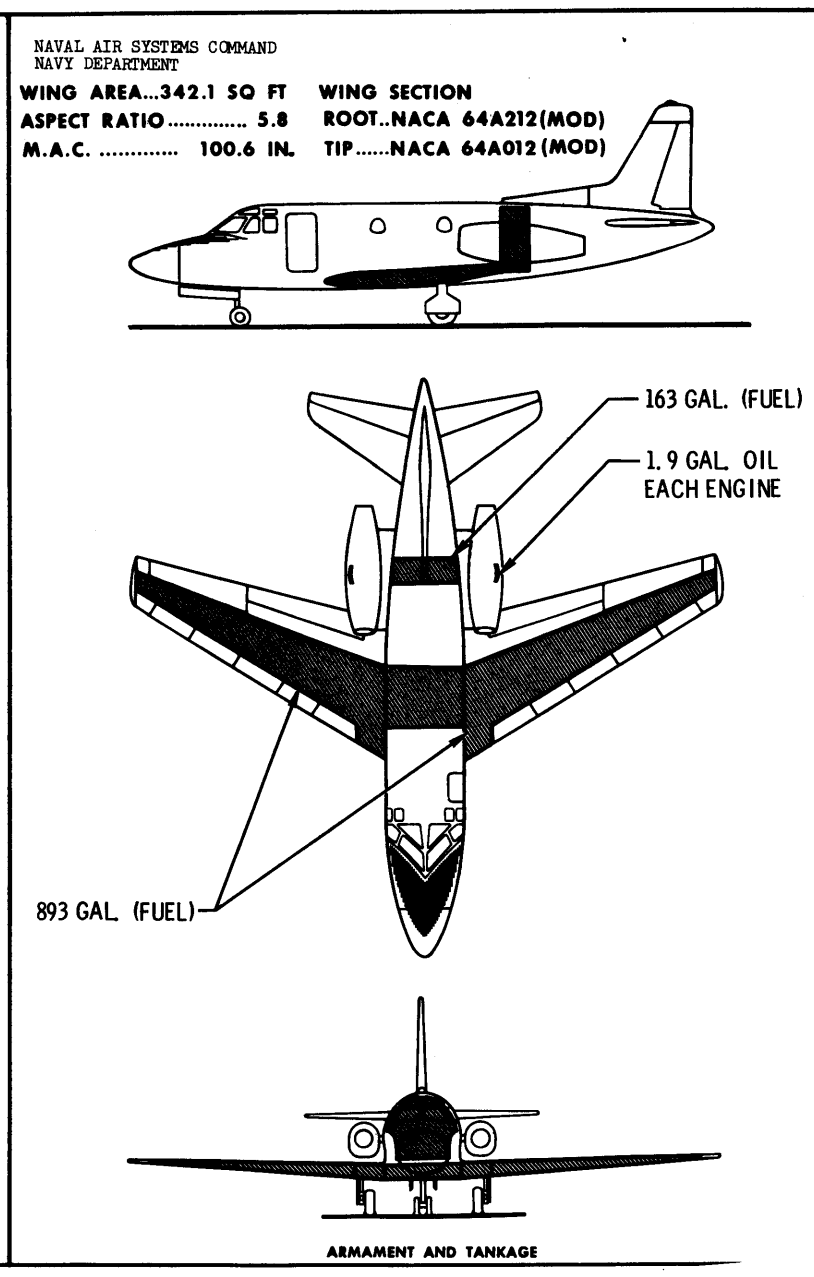

ARMAMENT AND TANKAGE

T-39D

POWER PLANT

No. & Model . . . . .(2) J60-P-3A
Mfr. . . . . Pratt & Whitney
Engine Spec. No. . . . . A-2412 E
Type . . . . . Axial Turbojet
Length . . . . . 76.0 in.
Diameter. . . . . 21.4 in.
Weight (Dry). . . . . 448 lb.
Tail Pipe . . . . . Fixed Area
Augmentation . . . . . None

RATINGS

S. L. S.	LB.	RPM	MIN.
Max:	3000	16,200	30
Normal:	2570	15,360	Cont.

ELECTRONICS

Tacan	AN/ARN-52
IFF/SIF	AN/APX-46
UHF Command	AN/ARC-52
UHF Standby Receiver	AN/ARR-40
VOR/LOC Receiver	AN/ARN-14E
Marker Beacon	AN/ARN-32
Glide Path	AN/ARN-18
Interphone System	AN/AIC-14
UHF-ADF Type	AN/ARA-25A
Radar Altimeter	AN/APN-141
Radar Set	AN/APQ-94
Flight Director System	

MISSION AND DESCRIPTION

Air Force Equivalent: T-39B Mfr's Model: NA-277

The primary mission of this airplane will be flight training in radarscope interpretation.

Special features of this airplane are aerodynamically balanced control surfaces, hydraulically operated speed brake, and automatic leading edge slats. The crew will consist of a pilot and a copilot (main student). Provisions are made in the aft cabin for an instructor, two standby students, and a navigators station. The airplane is designed in conformance with FAA certification procedures.

The cabin and cockpit are pressurized to 8000-foot-cabin altitude for an airplane altitude from 8000 feet to 45,000 feet. Adequate heating and air conditioning is provided for cabin and cockpit.

Structural design maximum dive speed is 508 knots EAS.

DEVELOPMENT

First Flight (UTX)	Sep 58
First Flight (T-39A)	Jun 60
First Flight (T-39B)	Nov 60
First Flight (T-39D)	Dec 62

DIMENSIONS

Wing
- Span. . . . . 44.4'
- Incidence (root) . . . . 0°
- (tip) . . . . -2.9°
- Dihedral . . . . . 3.1°
- Geometric twist . . . -2.9°
- Sweepback (25% Chord) 28.6°

Length. . . . . 43.8'
Height. . . . . 16.0'
Tread . . . . . 7.2'

WEIGHTS

Loading	LB.	L. F.
Empty	10,250	
Basic	10,341	
Performance	*14,930	3.5
Max Design Flt.		
Basic Mission	16,870	3.5
Extended Range	17,375	2.5
Max T. O.	17,760	
Design Landing	13,000	

* For Basic Mission

FUEL AND OIL

Location	No. Tanks	Gal.
Wing	2	893
Fuselage	1	163
	Total	1056
Grade	JP-4 or JP-5	
Specification	MIL-J-5624D	

OIL

Nacelle	2 (Total)	3.8
Specification	MIL-L-7808	

ORDNANCE

AN/APQ-94 Fire Control Radar

(No Guns or Missiles)

PERFORMANCE SUMMARY

TAKE-OFF LOADING CONDITION		BASIC MISSION 1	EXTENDED 2 RANGE MISSION
TAKE-OFF WEIGHT	lb.	17,255	17,760
Fuel internal/external (JP-4)	lb./lb.	5804 / N. A.	6864 / N. A.
Payload	lb.	7005	7510
Wing loading	lb./sq. ft.	50.4	51.8
Stall speed—power-off (5)	kn.	101.4	102.8
Take-off run at S.L.— calm (1) (6)	ft.	2410	2600
Take-off run at S.L.— 25 kn. wind	ft.	Not Applicable	Not Applicable
Take-off to clear 50 ft.— calm (1) (6)	ft.	3610	3835
Max. speed/altitude (2) (7)	kn./ft.	482/21,000	482/20,000
Rate of climb at S.L. (1)	fpm.	5130	4940
Time: S.L. to 20,000 ft. (1) (3)	min.	5.5	5.9
Time: S.L. to 30,000 ft. (1) (3)	min.	10.4	11.0
Service ceiling (100 fpm) (1)	ft.	43,100	42,500
Combat range	n.mi.	1195	1505
Average cruising speed	kn.	436	436
Cruising altitude(s)	ft.	40,600 - 45,000	40,000 - 45,000
Combat radius/mission time	n.mi./hr.	Not Applicable	Not Applicable
Average cruising speed	kn.	Not Applicable	Not Applicable
COMBAT LOADING CONDITION		Not Applicable	Not Applicable
COMBAT WEIGHT	lb.		
Engine power			
Fuel	lb.		
Combat speed/combat altitude	kn./ft.		
Rate of climb/combat altitude	fpm/ft.		
Combat ceiling (500 fpm) (1)	ft.		
Rate of climb at S.L. (1)	fpm.		
Max. speed at S.L.	kn.		
Max. speed/altitude (1)	kn./ft.		
LANDING WEIGHT (5% INITIAL FUEL)	lb.	11,741	11,240
Fuel	lb.	290	344
Stall speed—power-off/approach power	kn./kn.	77.6/N. A.	75.8/N. A.
Landing distance-ground roll/over 50 ft. obst. (5)	ft./ft.	1720/2750	1610/2620

NOTES

1. Military power
2. Normal power
3. Allows for weight reduction during ground operation and climb
4. Detailed descriptions of RANGE missions given on page 6
5. Flaps 25°, slats open
6. Flaps 0°, slats operable
7. 60% Total fuel

PERFORMANCE BASIS:

(a) Data source: Estimated from flight test
(b) Performance is based on powers shown on page 6
(c) Fuel flow data used in computing RANGE missions are increased 5%

T-39D

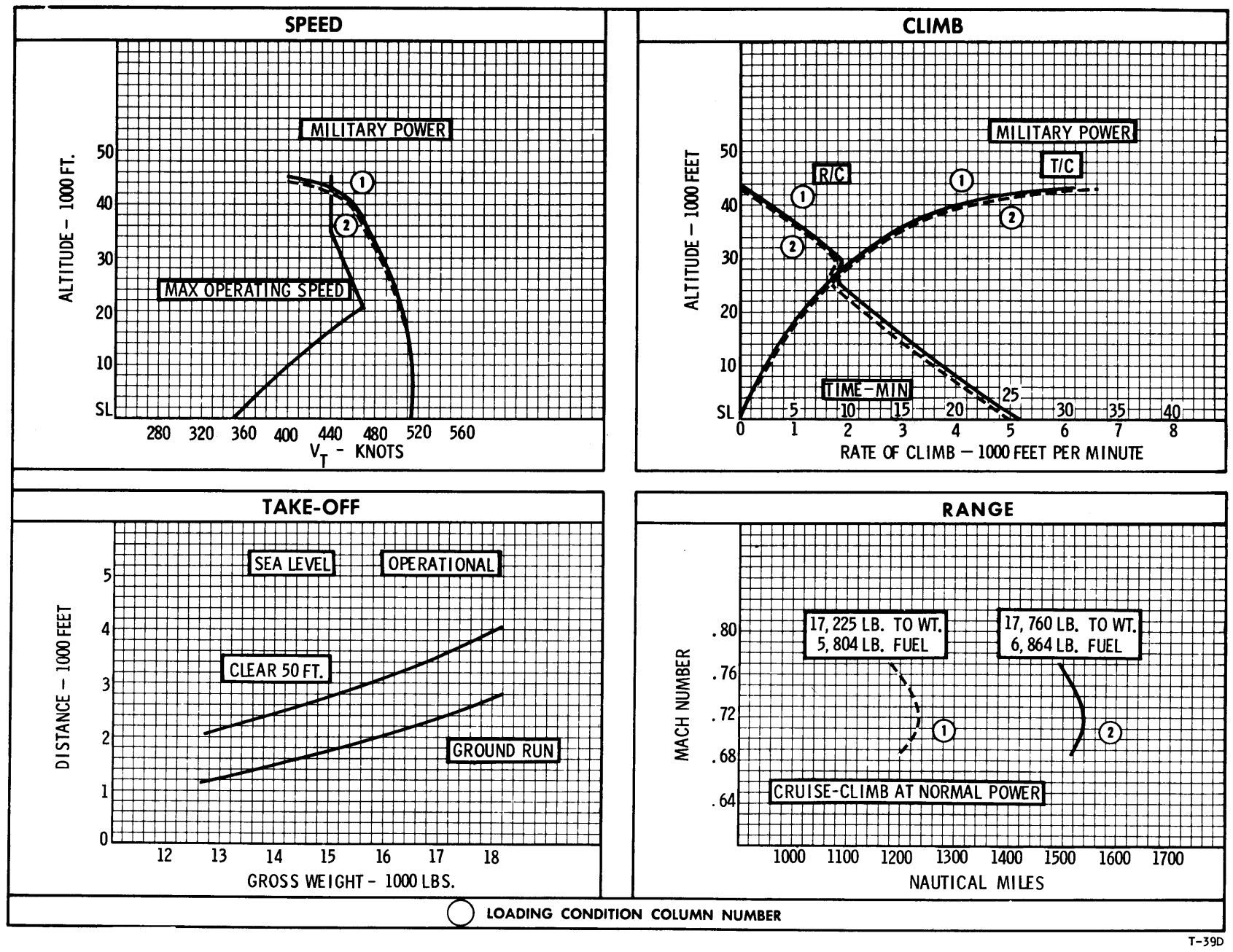
SPEED
MILITARY POWER
MAX OPERATING SPEED
ALTITUDE - 1000 FT.
50
40
30
20
10
SL
280 320 360 400 440 480 520 560
V_T - KNOTS
CLIMB
MILITARY POWER
R/C
T/C
TIME-MIN
5 10 15 20 25 30 35 40
ALTITUDE - 1000 FEET
0 1 2 3 4 5 6 7 8
RATE OF CLIMB — 1000 FEET PER MINUTE
TAKE-OFF
SEA LEVEL
OPERATIONAL
CLEAR 50 FT.
GROUND RUN
DISTANCE - 1000 FEET
0 1 2 3 4 5
12 13 14 15 16 17 18
GROSS WEIGHT - 1000 LBS.
RANGE
17,225 LB. TO WT.
5,804 LB. FUEL
17,760 LB. TO WT.
6,864 LB. FUEL
CRUISE-CLIMB AT NORMAL POWER
MACH NUMBER
.80 .76 .72 .68 .64
1000 1100 1200 1300 1400 1500 1600 1700
NAUTICAL MILES
LOADING CONDITION COLUMN NUMBER

T-39D

NOTES

FORMULA: RANGE MISSION (1) (2)

Take-off with military power; climb on course to initial cruise altitude with military power; cruise-climb to 45,000 feet with normal power at .76 M; cruise at .76 M at 45,000 feet. Range free allowances include 5 minutes normal power at sea level for fuel used in starting engines and take-off, and a reserve equal to 30 minutes loiter at sea level at speeds for maximum endurance plus 5% of initial fuel.

GENERAL DATA:

(a) Engine values shown under Power Plant are guaranteed values. Installed values used in performance calculations are as follows:

(2) J60-P-3A		
S. L. STATIC	LB	RPM
Mil:	2920	16,010
Nor:	2525	15,310

PERFORMANCE BASIS

North American Report No. NA-59-390 "Aerodynamic and Thermodynamic Data for a Twin Engine Turbojet Utility Trainer with a Pratt & Whitney J60 Engine (NAA Designation NA-265)," Appendix I, dated 20 June 1962.

North American Report No. NA-62-137 "FAA Type Inspection Report, Model NA-265."

◯ LOADING CONDITION COLUMN NUMBER

☆U.S. GOVERNMENT PRINTING OFFICE: 1970-393-871/S-16607